LBT-N355

MANUAL DE SERVIÇO

BRAZILIAN MODEL

RM-SD50
Controle Remoto

Especificações técnicas

SEÇÃO DE CD	Tipo de Mecanismo	CDM37-5BD19
	Tipo de Base	BU-5BD19
	Tipo de Unidade Ótica	KSS-213BA/S-N
SEÇÃO DE TAPE DECK	Modelo que usa mecanismo similar	LBT-N555
	Tipo de Mecanismo	TCM-220WR2E

Sintonizador
Sintonizador superheteródino de FM/AM, FM estéreo
Sintonizador de FM (freqüência modulada)
Faixa de sintonia
87,5 – 108,0 MHz (intervalo de 50 kHz)
Antena Cabo de antena de FM
Terminais de antena
75 Ω não balanceado
Sintonizador de AM (ondas médias)
Faixa de sintonia
530 – 1.710 kHz (com intervalo de sintonização ajustado a 10 kHz).
Antena Antena loop de AM
Terminais para antena externa
Freqüência intermediária
450 kHz

Reprodutor de CDs
Sistema Sistema de áudio digital de discos compactos
Laser Laser semiconductor (λ = 780 nm) Duração da emissão: contínua
Saída do laser Máx. 44,6 µW
Resposta de freqüência
2Hz – 20KHz (± 0,5 dB)
Comprimento da onda
780 – 790 nm

Reprodutor de fitas
Sistema de gravação
4 pistas e 2 canais, estéreo
Resposta de freqüência
40 – 13.000 Hz (±3 dB), com fita cassete Sony tipo I
40 – 14.000 Hz (±3 dB), com fita cassete Sony tipo II
Wow flutter
0,1% WRMS (NAB)

SISTEMA INTEGRADO DE SOM

SONY

5-8. SCHEMATIC DIAGRAM — CD PANEL SECTION —

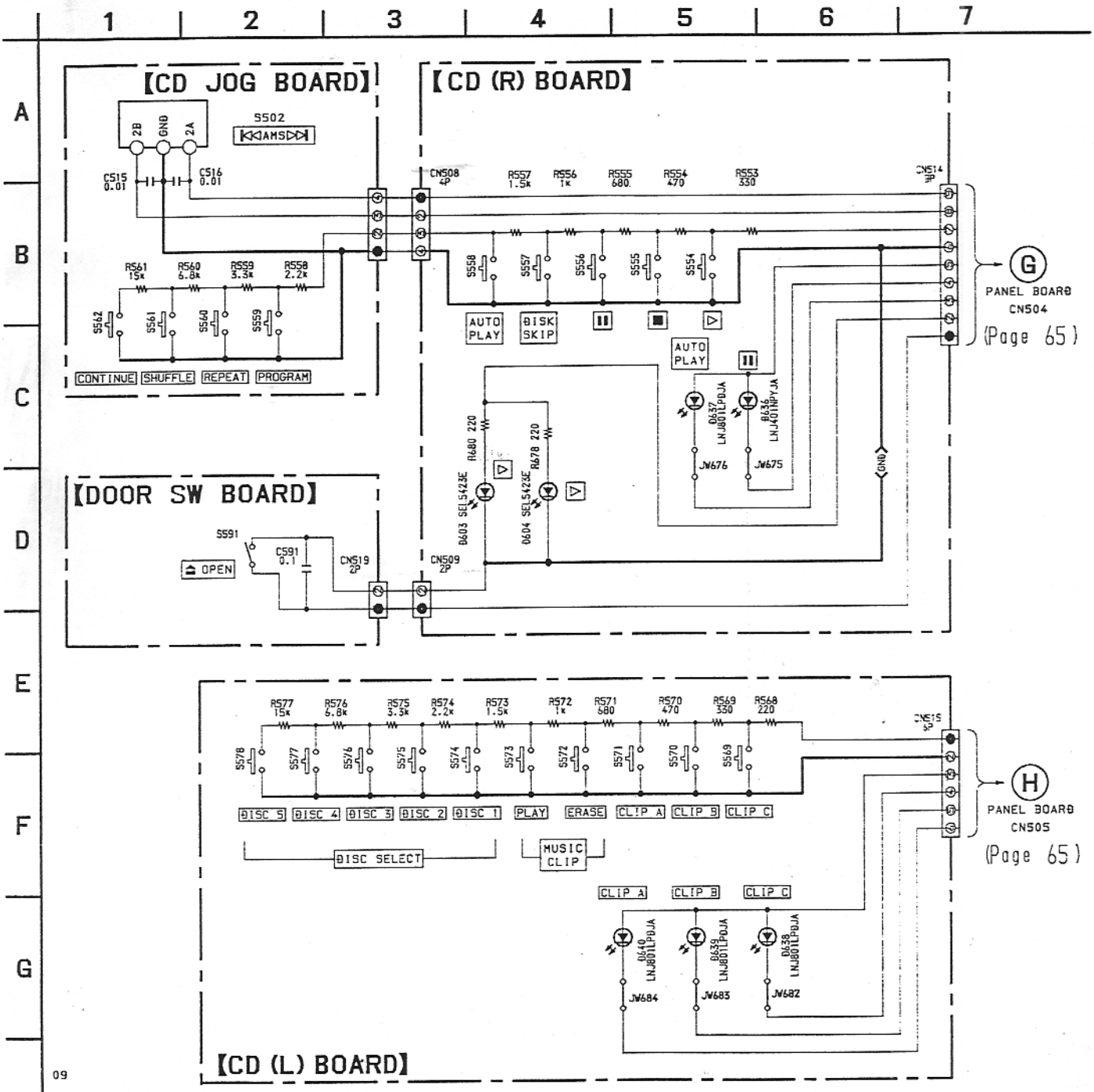

09

NOTE

- All capacitors are in μF unless otherwise noted. pF: μμF 50WV or less are not indicated except for electrolytics and tantalums.
- All resistors are in Ω and 1/4W or less unless otherwise specified.
- [ ] :panel designation.

1 2 3 4 5 6 7 8 9 10 11 12

A B C D E

NOTE

- All capacitors are in μF unless otherwise noted. pF: μμF 50WV or less are not indicated except for electrolytics and tantalums.
- All resistors are in Ω and 1/4W or less unless otherwise specified.
- B+ :B+ Line.
- Voltages and waveforms are dc with respect to ground under no-signal conditions.
  no mark: STOP
- Voltages are taken with a VOM (Input impedance 10MΩ). Voltage variations may be noted due to normal production tolerances.

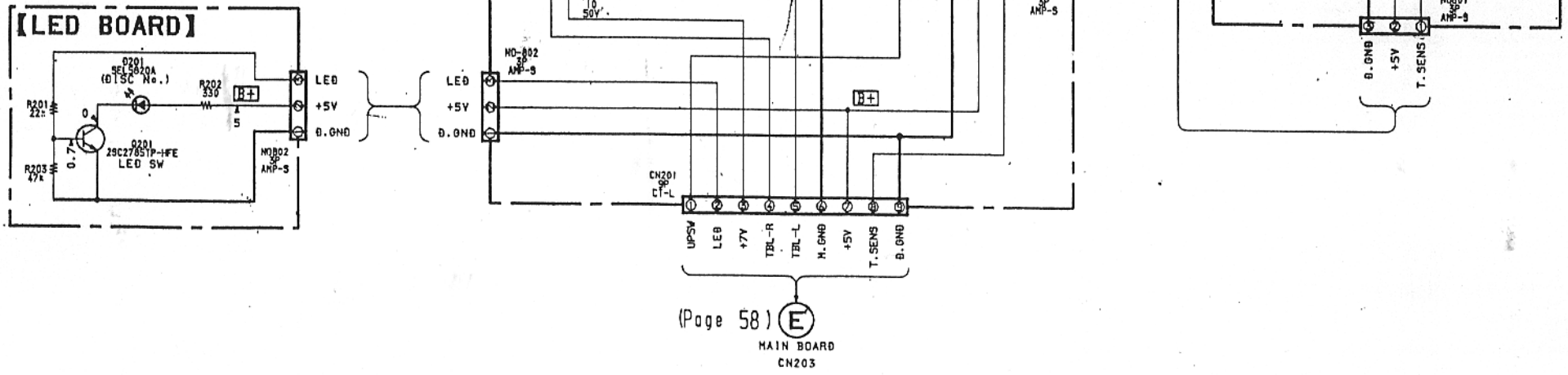

5-20. SCHEMATIC DIAGRAM — CD MOTOR SECTION —

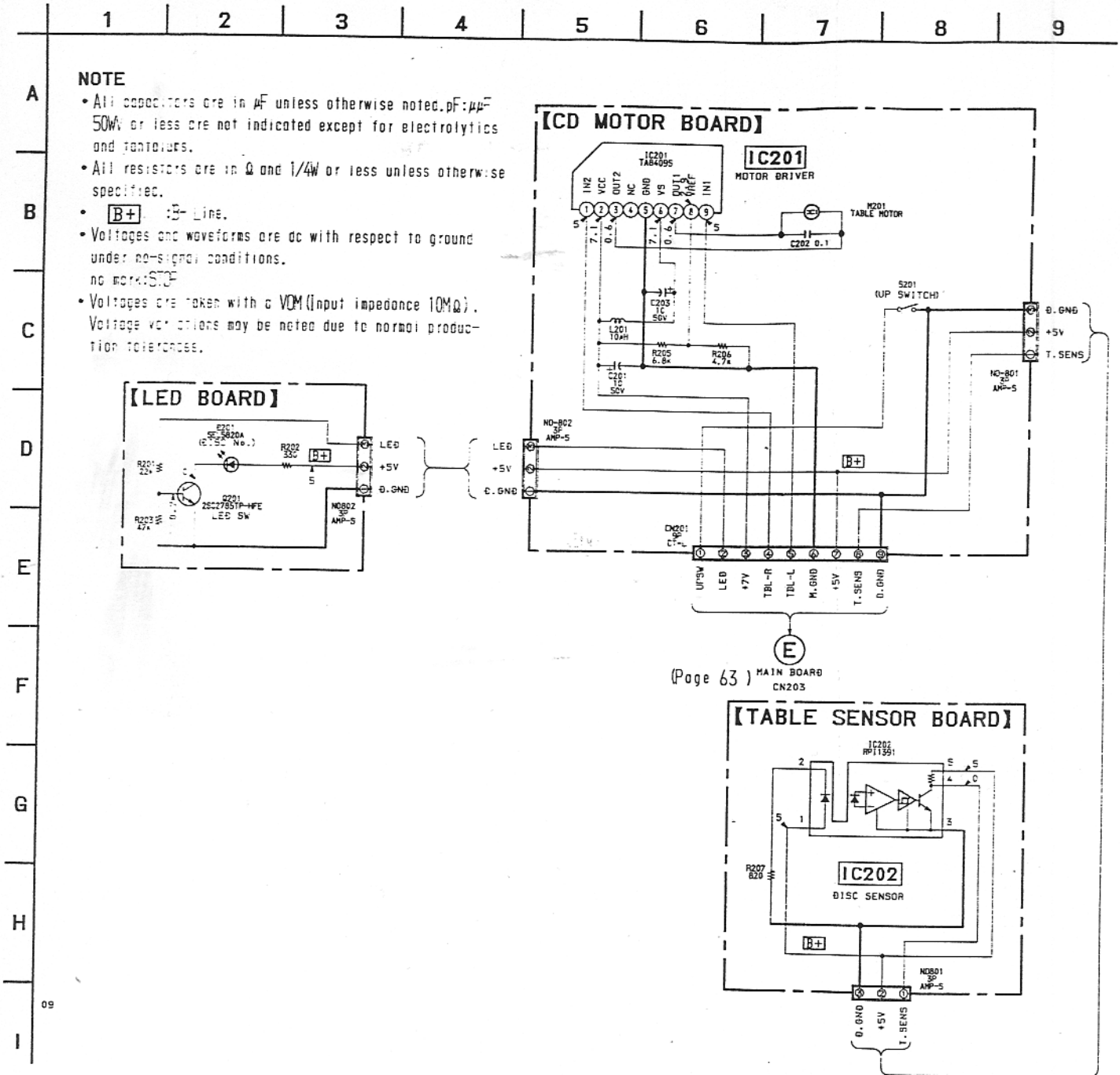

5-18. SCHEMATIC DIAGRAM — CD PANEL SECTION —

- Semiconductor Location

Ref. No.	Location
IC601	H-3
IC602	G-4
IC611	H-9
Q621	H-6
Q622	H-6
Q623	H-5
Q651	F-9
Q1001	B-2
Q1002	B-6

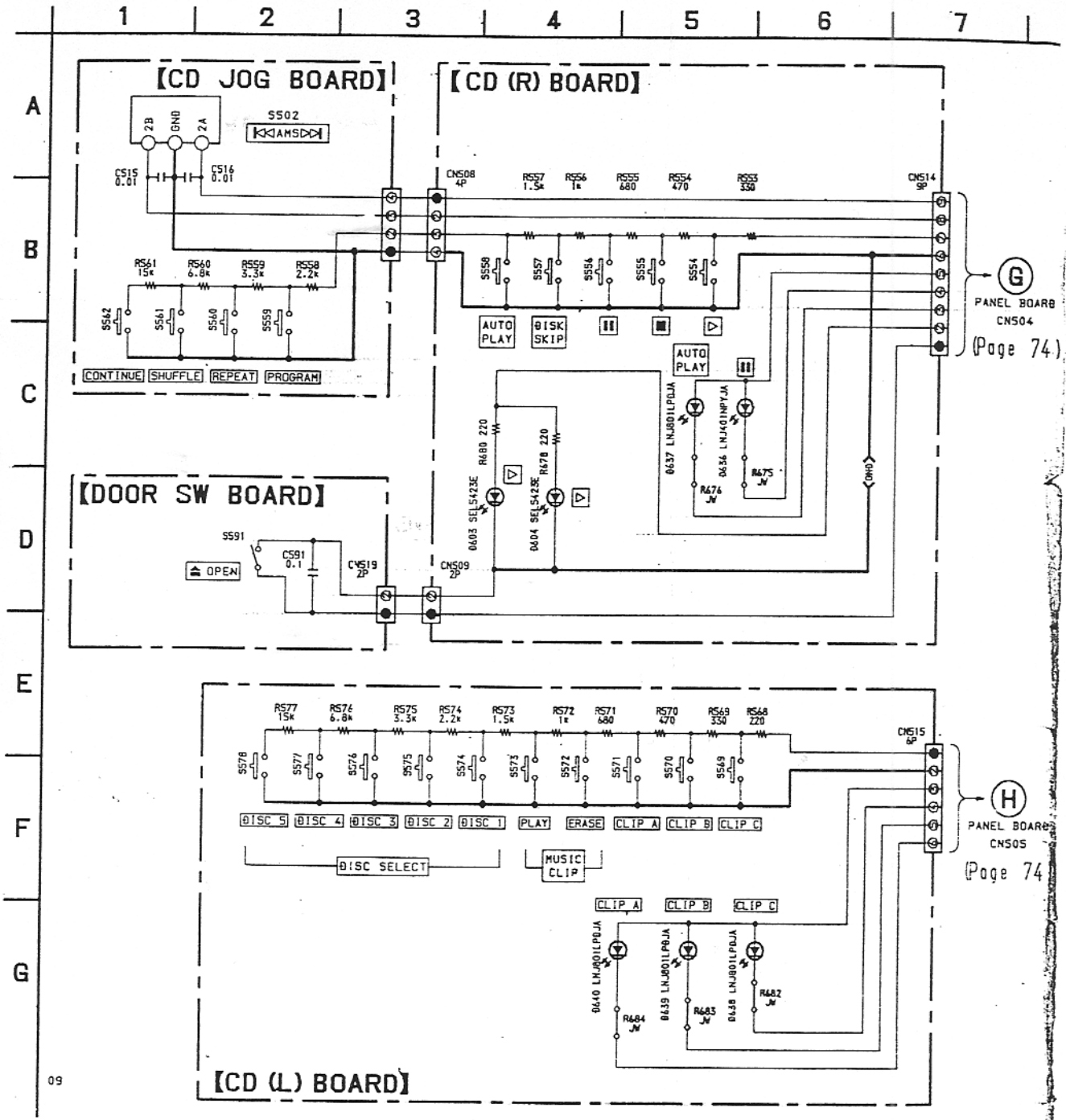

NOTE

- All capacitors are in μF unless otherwise noted. pF: μμF 50WV or less are not indicated except for electrolytics and tantalums.
- All resistors are in Ω and 1/4W or less unless otherwise specified.
- [ ] : panel designation.
- JW : Jumper Wire

RING BOARD — DECK SECTION —
8 for Circuit Boards Location.

Note:

- ○—— : parts extracted from the component side.
- : Pattern from the side which enable seeing.

2	3	4	5	6	7	8	9

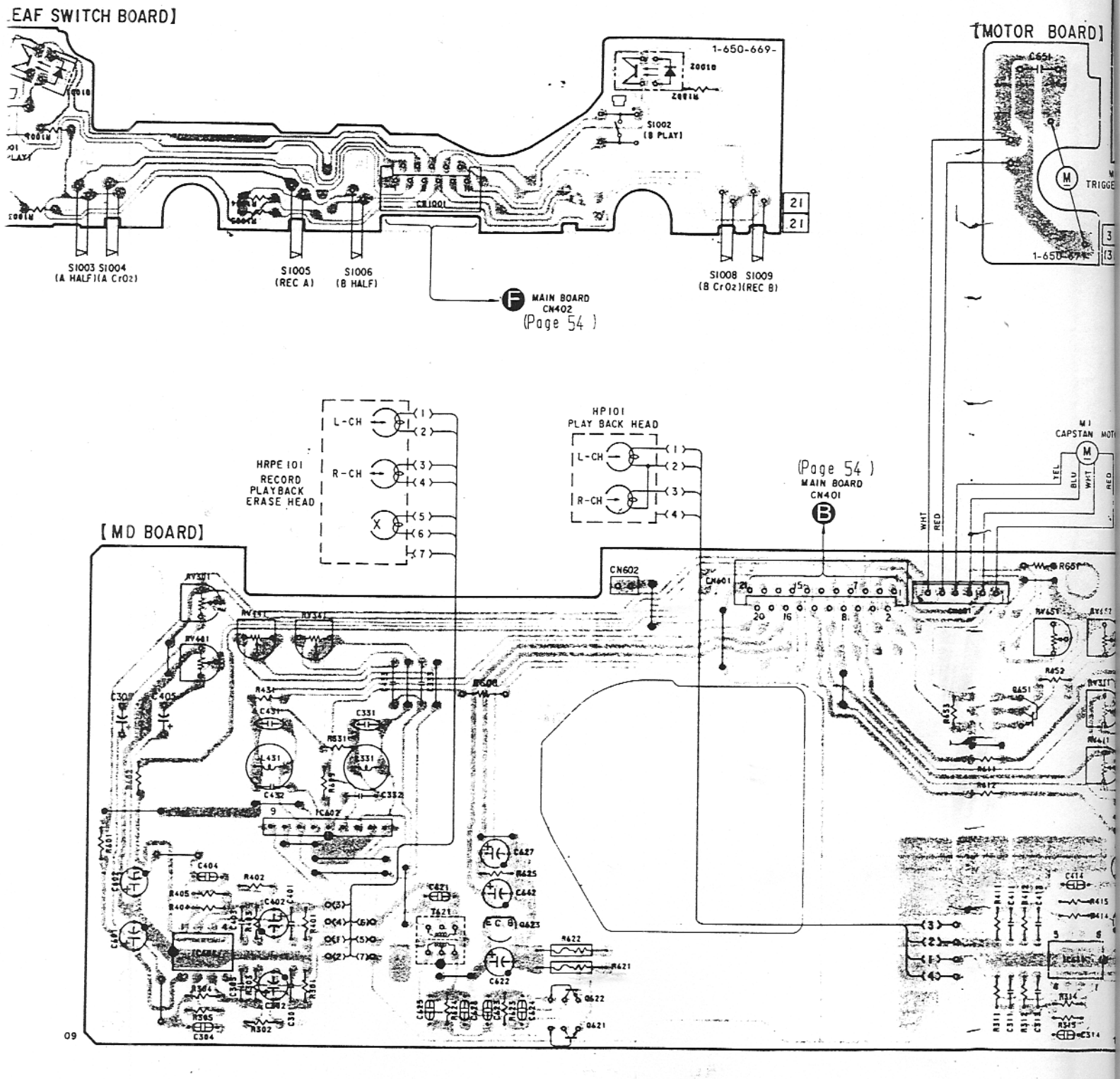

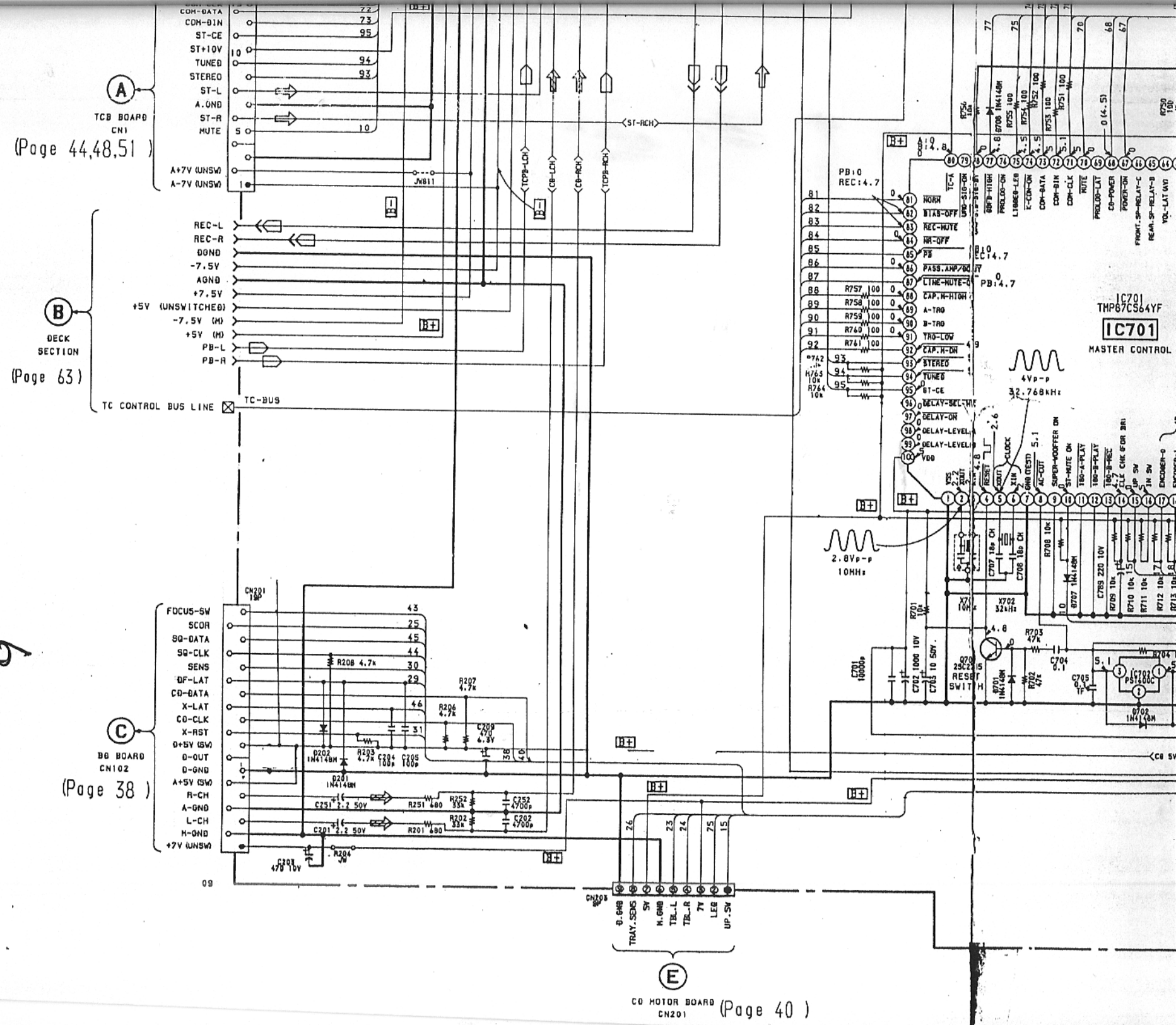

A
TCB BOARD
CN1
(Page 44,48,51)
COM-DATA
COM-DIN
ST-CE
ST+10V
TUNED
STEREO
ST-L
A.GND
ST-R
MUTE
A+7V (UNSW)
A-7V (UNSW)
B
DECK
SECTION
(Page 63)
REC-L
REC-R
DGND
-7.5V
AGND
+7.5V
+5V (UNSWITCHED)
-7.5V (M)
+5V (M)
PB-L
PB-R
TC CONTROL BUS LINE
TC-BUS
C
BD BOARD
CN102
(Page 38)
FOCUS-SW
SCOR
SQ-DATA
SQ-CLK
SENS
DF-LAT
CD-DATA
X-LAT
CD-CLK
X-RST
D+5V (SW)
D-OUT
D-GND
A+5V (SW)
R-CH
A-GND
L-CH
M-GND
+7V (UNSW)
E
CD MOTOR BOARD
CN201
(Page 40)
D.GND
TRAY.SENS
5V
M.GND
TBL.L
TBL.R
7V
LED
UP.SW
IC701
TMP87CS64YF
IC701
MASTER CONTROL
4Vp-p
32.768kHz
2.8Vp-p
10MHz
X702
32kHz
RESET
SWITCH

[MAIN BOARD (1/2)]

*JW801, JW809, JW851, JW859

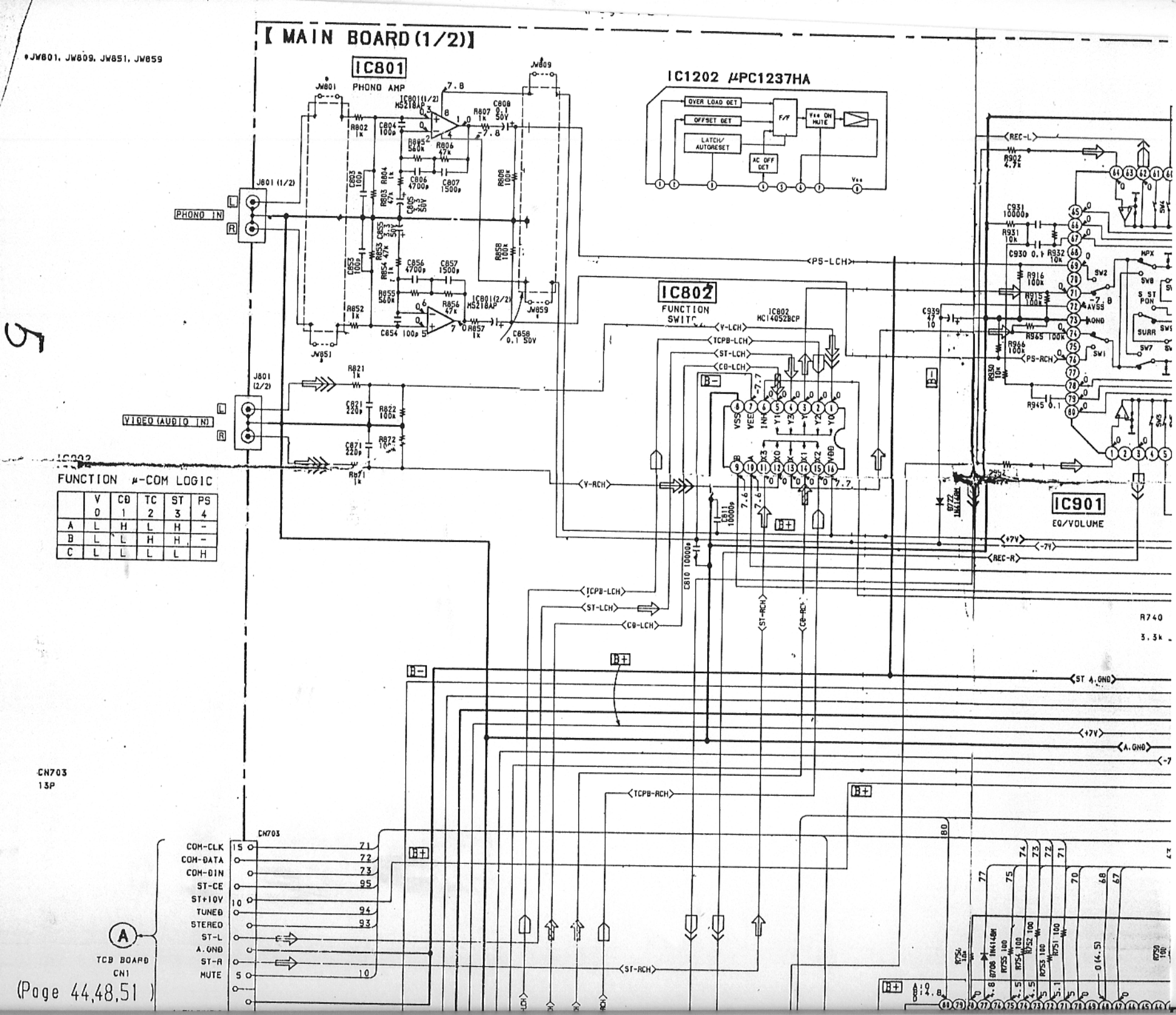

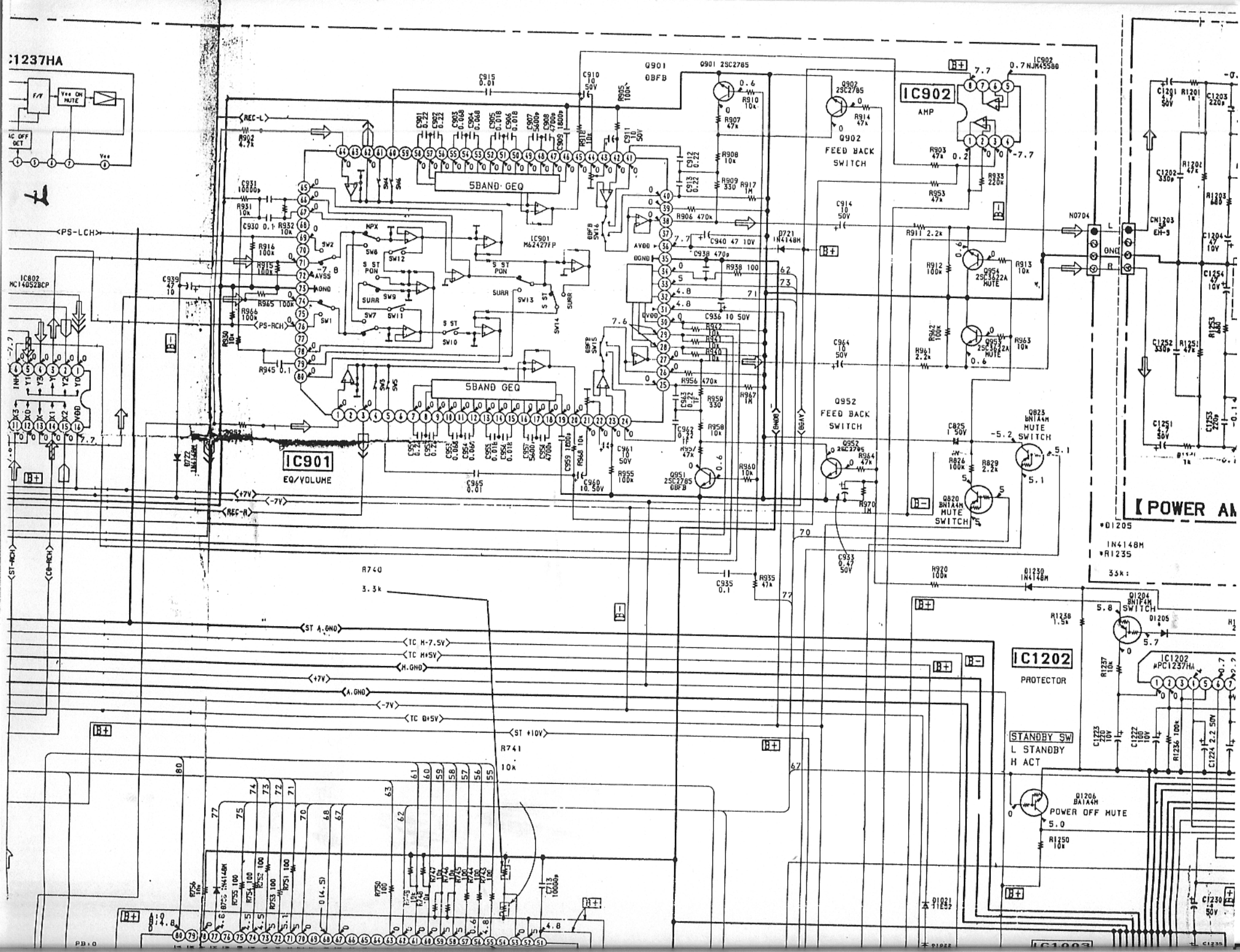

C1237HA
IC902
AMP
Q901
OBFB
Q902
FEED BACK
SWITCH
Q952
FEED BACK
SWITCH
5BAND GEQ
5BAND GEQ
IC901
EQ/VOLUME
IC802
MC14052BCP
IC901
M62427FP
IC902
NJM4558D
Q954
2SC3622A
MUTE
Q953
2SC3622A
MUTE
Q823
BN1A4M
MUTE
SWITCH
Q820
BN1A4M
MUTE
SWITCH
Q951
2SC2785
OBFB
Q952
2SC2785
Q1204
BN1F4M
SWITCH
IC1202
PROTECTOR
IC1202
μPC1237HA
STANDBY SW
L STANDBY
H ACT
Q1206
BA1A4M
POWER OFF MUTE
POWER AM
R740
3.3k
R741
10k

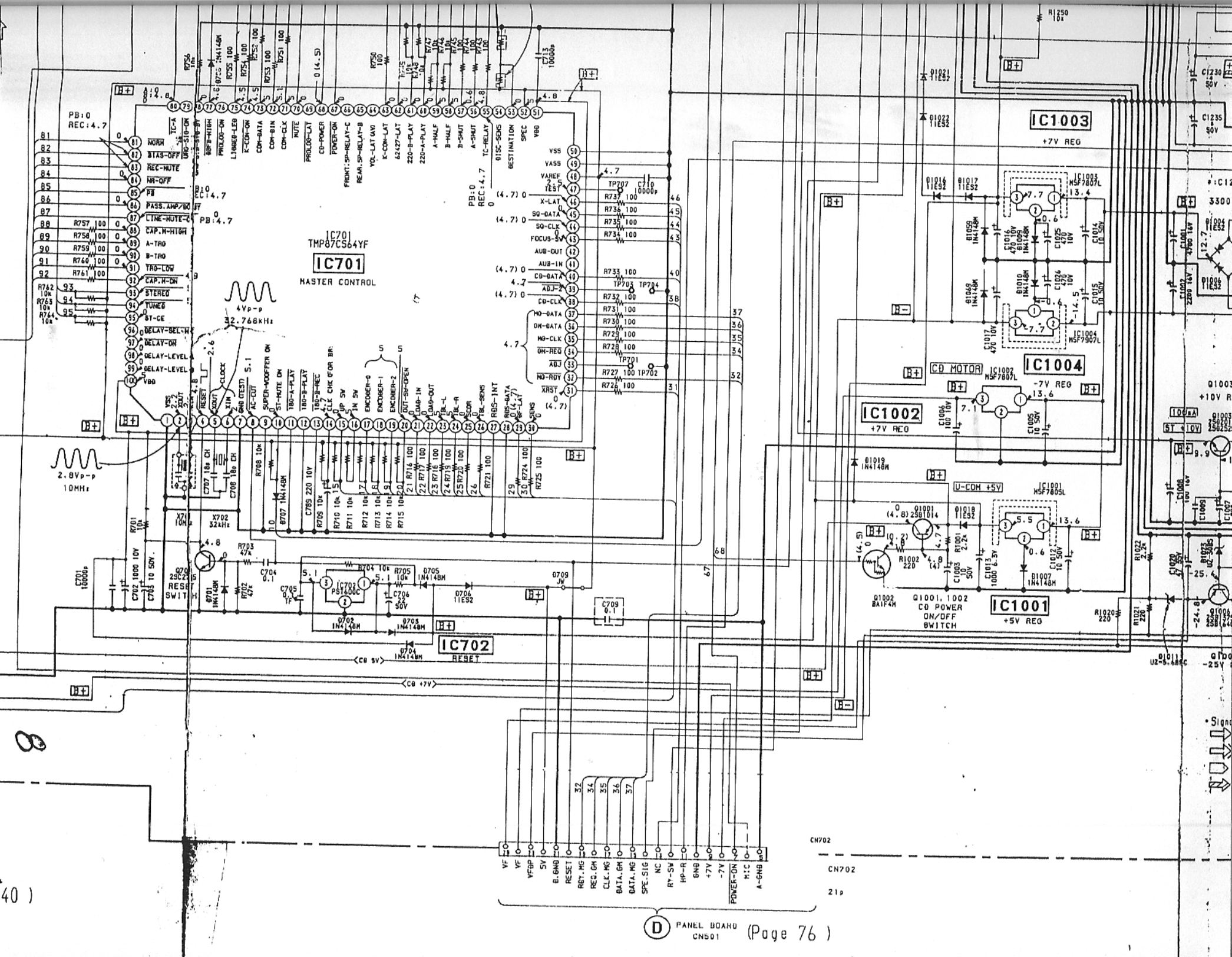
IC701
TMP87CS64YF
IC701
MASTER CONTROL
IC1003
+7V REG
IC1004
-7V REG
IC1002
+7V REG
IC1001
+5V REG
IC702
RESET
CD MOTOR
U-COM +5V
Q1001, 1002
CD POWER
ON/OFF
SWITCH
4Vp-p
32.768kHz
2.8Vp-p
10MHz
CD 5V
CD +7V
CN702
21p
PANEL BOARD
CN501

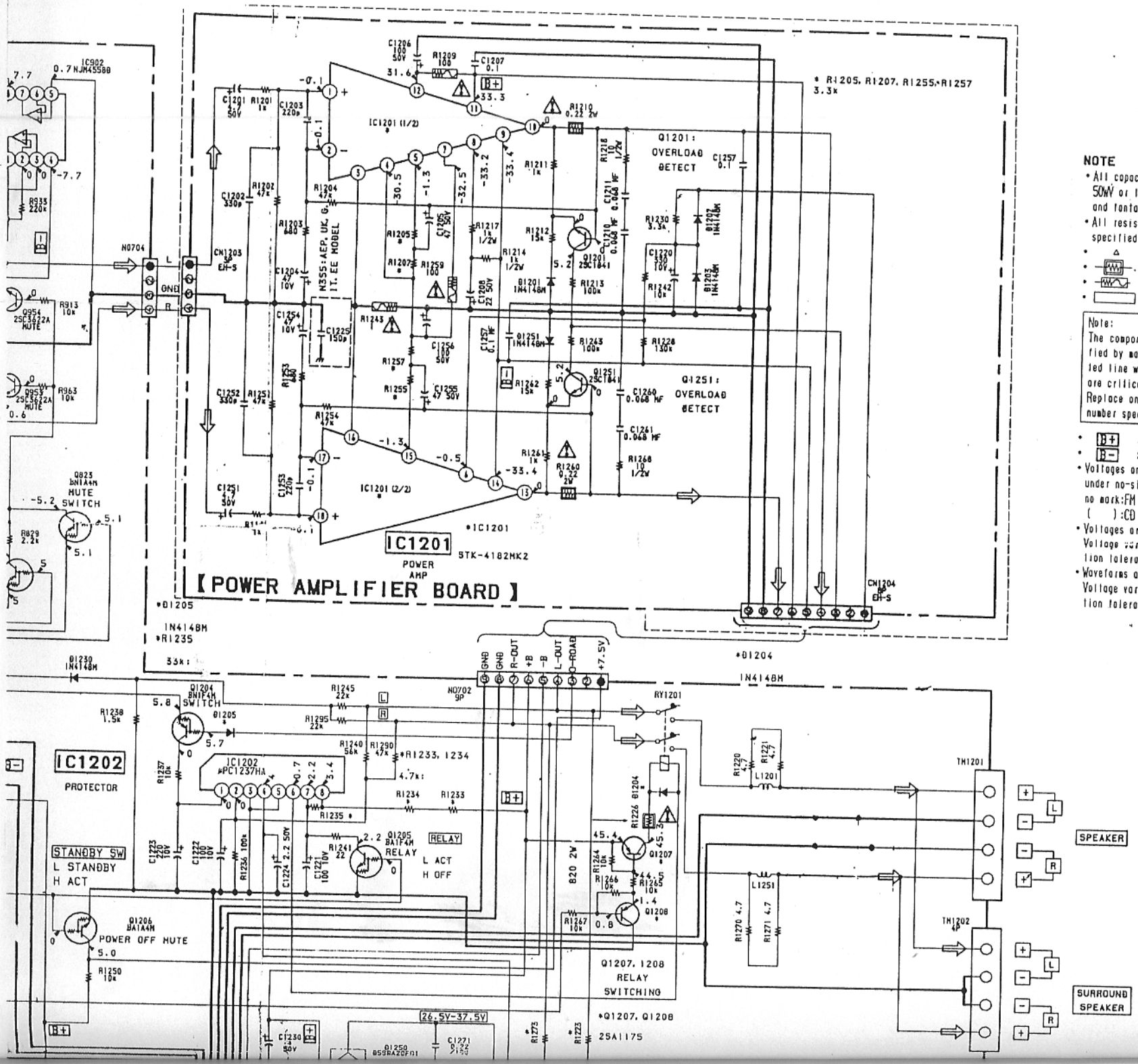

NOTE

- All capacitors are in μF unless otherwise noted. pF: μμF 50WV or less are not indicated except for electrolytics and tantalums.
- All resistors are in Ω and 1/4W or less unless otherwise specified.
- △ :internal component.
- :nonflammable resistor.
- :fusible resistor.
- :panel designation.

Note:	Note:
The components identified by mark ⚠ or dotted line with mark ⚠ are critical for safety. Replace only with part number specified.	Les composants identifiés par une marque ⚠ sont critiques pour la sécurité. Ne les remplacer que par une pièce portant le numéro spécifié.

- B+ :B+ Line.
- B- :B- Line.
- Voltages and waveforms are dc with respect to ground under no-signal (detuned) conditions.
  no mark: FM
  ( ) : CD PLAY
- Voltages are taken with a VOM (Input impedance 10MΩ). Voltage variations may be noted due to normal production tolerances.
- Waveforms are taken with a oscilloscope. Voltage variations may be noted due to normal production tolerances.

10

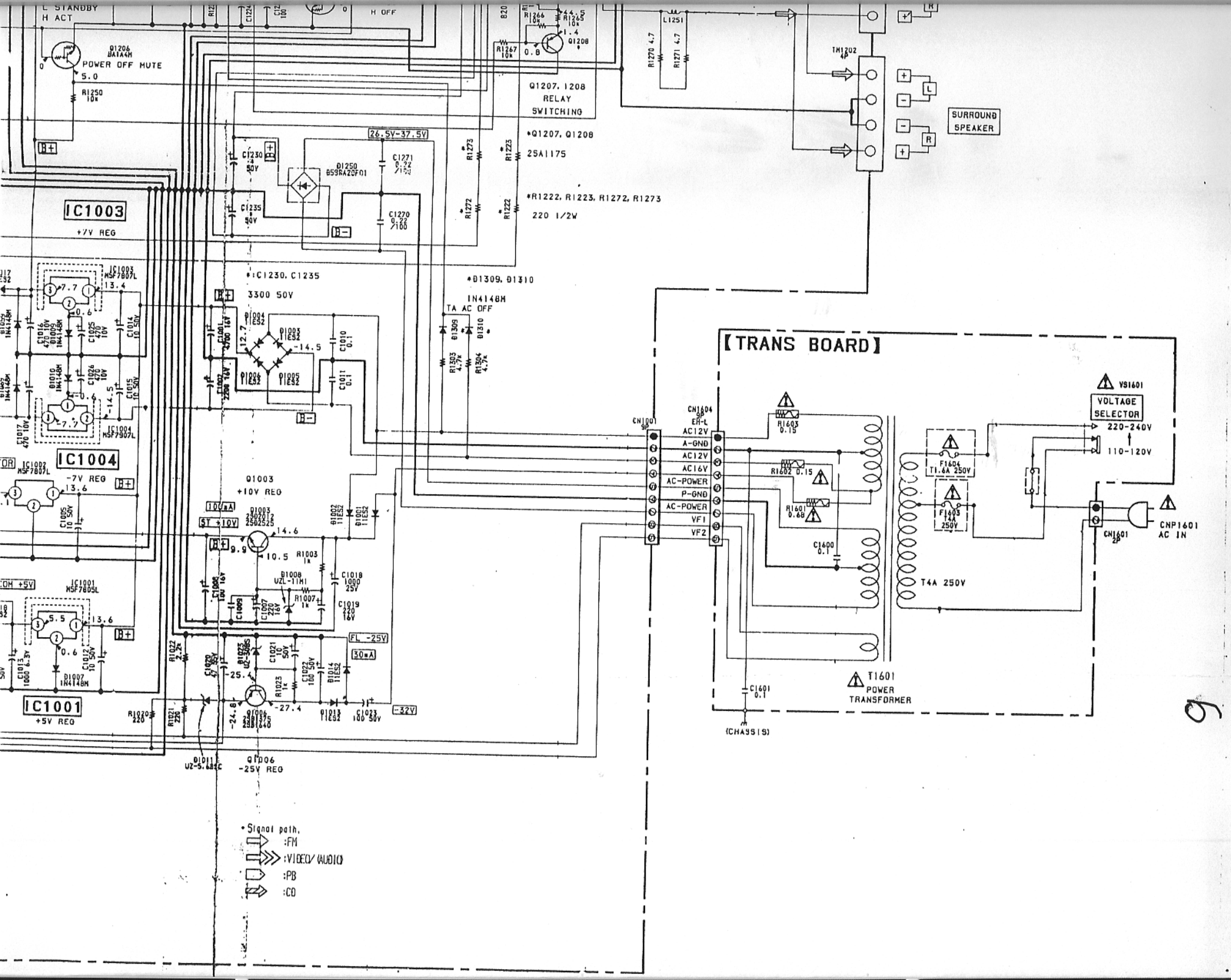

L STANDBY
H ACT
Q1206
POWER OFF MUTE
H OFF
Q1207, 1208
RELAY
SWITCHING
*Q1207, Q1208
2SA1175
*R1222, R1223, R1272, R1273
220 1/2W
SURROUND
SPEAKER
IC1003
+7V REG
IC1004
-7V REG
IC1001
+5V REG
*:C1230, C1235
3300 50V
*D1309, D1310
1N4148M
TA AC OFF
Q1003
+10V REG
Q1006
-25V REG
FL -25V
-32V
【TRANS BOARD】
VOLTAGE
SELECTOR
220-240V
110-120V
CNP1601
AC IN
T4A 250V
T1601
POWER
TRANSFORMER
(CHASSIS)
AC12V
A-GND
AC12V
AC16V
AC-POWER
P-GND
AC-POWER
VF1
VF2
*Signal path,
:FM
:VIDEO/(AUDIO)
:PB
:CD

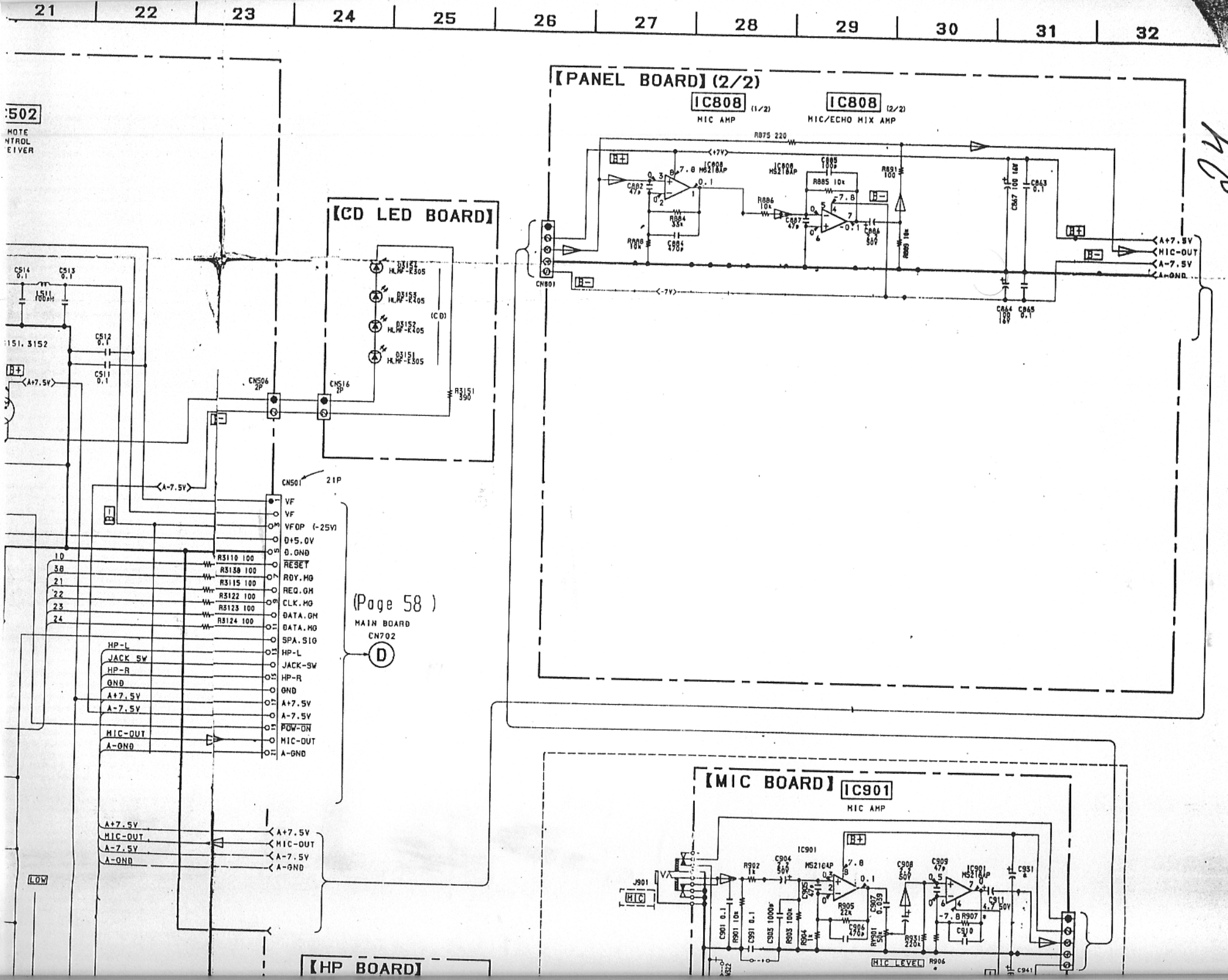
21
22
23
24
25
26
27
28
29
30
31
32
【PANEL BOARD】(2/2)
IC808 (1/2)
MIC AMP
IC808 (2/2)
MIC/ECHO MIX AMP
R875 220
+7V
-7V
CN801
A+7.5V
MIC-OUT
A-7.5V
A-GND
【CD LED BOARD】
CN506
CN516
R3151 390
(CD)
CN501
21P
VF
VF
VFOP (-25V)
D+5.0V
D.GND
RESET
RDY.MG
REQ.GH
CLK.MG
DATA.GH
DATA.MG
SPA.SIG
HP-L
JACK-SW
HP-R
GND
A+7.5V
A-7.5V
POW-ON
MIC-OUT
A-GND
(Page 58)
MAIN BOARD
CN702
D
【MIC BOARD】 IC901
MIC AMP
IC901
MIC
MIC LEVEL
【HP BOARD】
LOW

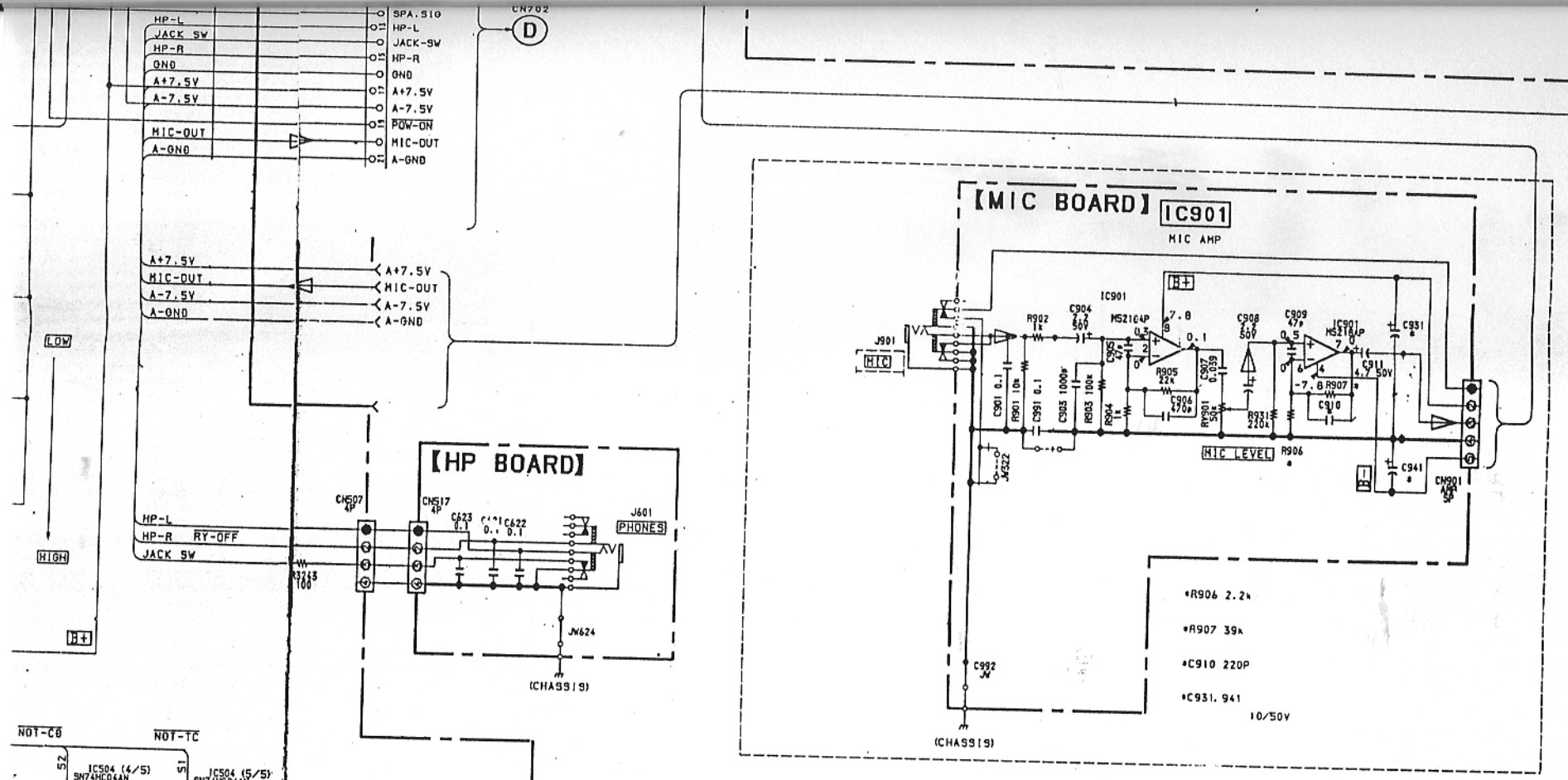

NOTE

- All capacitors are in μF unless otherwise noted. pF: μμF 50WV or less are not indicated except for electrolytics and tantalums.
- All resistors are in Ω and 1/4W or less unless otherwise specified.
- △ : internal component.
- ▭ : panel designation.
- B+ : B+ Line.
- B− : B− Line.
- Voltages and waveforms are dc with respect to ground under no-signal (detuned) conditions.
  no mark: FM
- Voltages are taken with a VOM (Input impedance 10MΩ). Voltage variations may be noted due to normal production tolerances.
- Waveforms are taken with a oscilloscope.
  Voltage variations may be noted due to normal production tolerances.

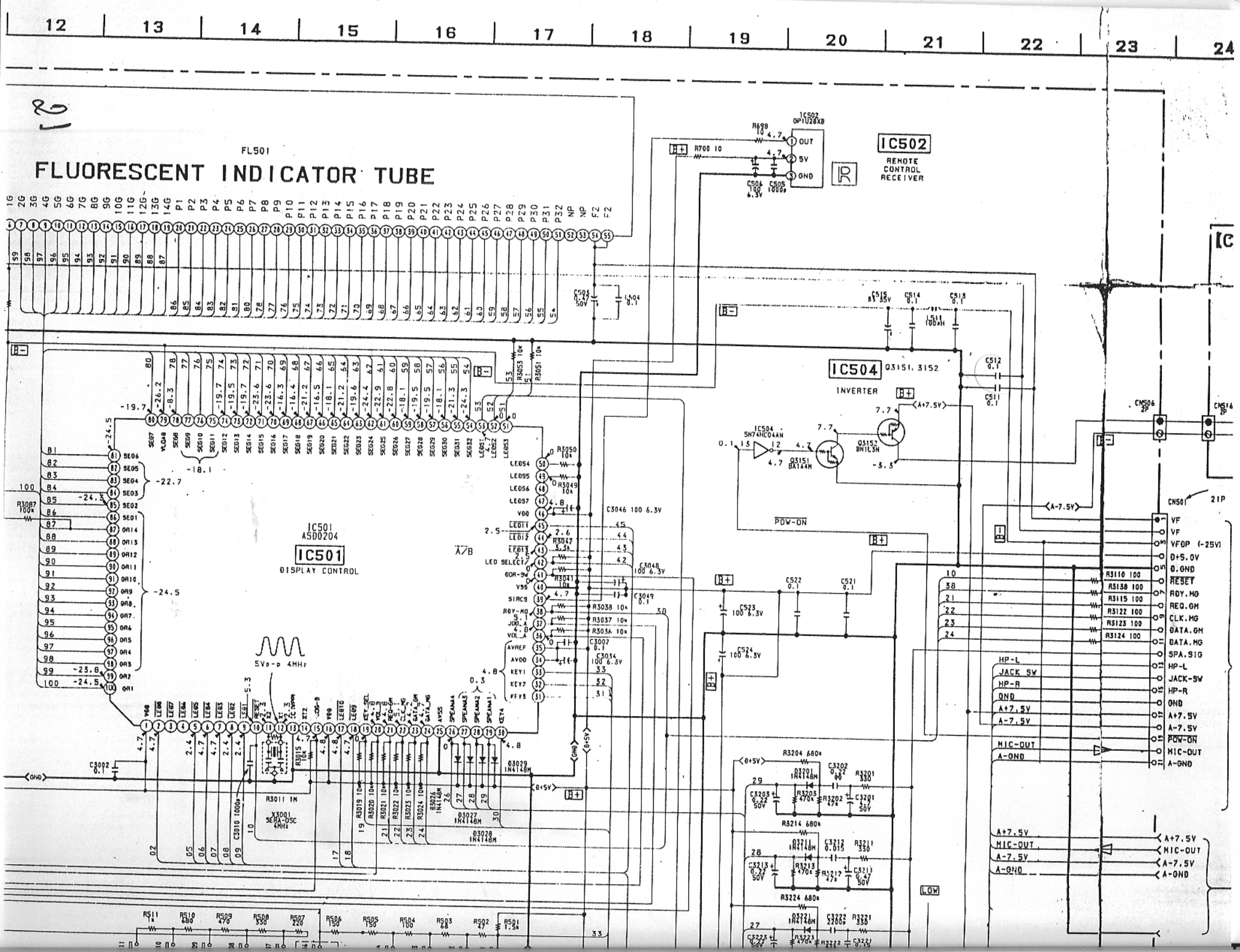
FL501
FLUORESCENT INDICATOR TUBE
IC502
REMOTE CONTROL RECEIVER
IC504
Q3151, 3152
INVERTER
IC501
ASD0204
DISPLAY CONTROL
POW-ON
LOW
CN501
21P
VF
VFOP (-25V)
D+5.0V
D.GND
RESET
RDY.MG
REQ.GM
CLK.MG
DATA.GM
DATA.MG
SPA.SIG
HP-L
JACK-SW
HP-R
GND
A+7.5V
A-7.5V
POW-ON
MIC-OUT
A-GND
5Vp-p 4MHz
X3001
SERA-OSC
4MHz

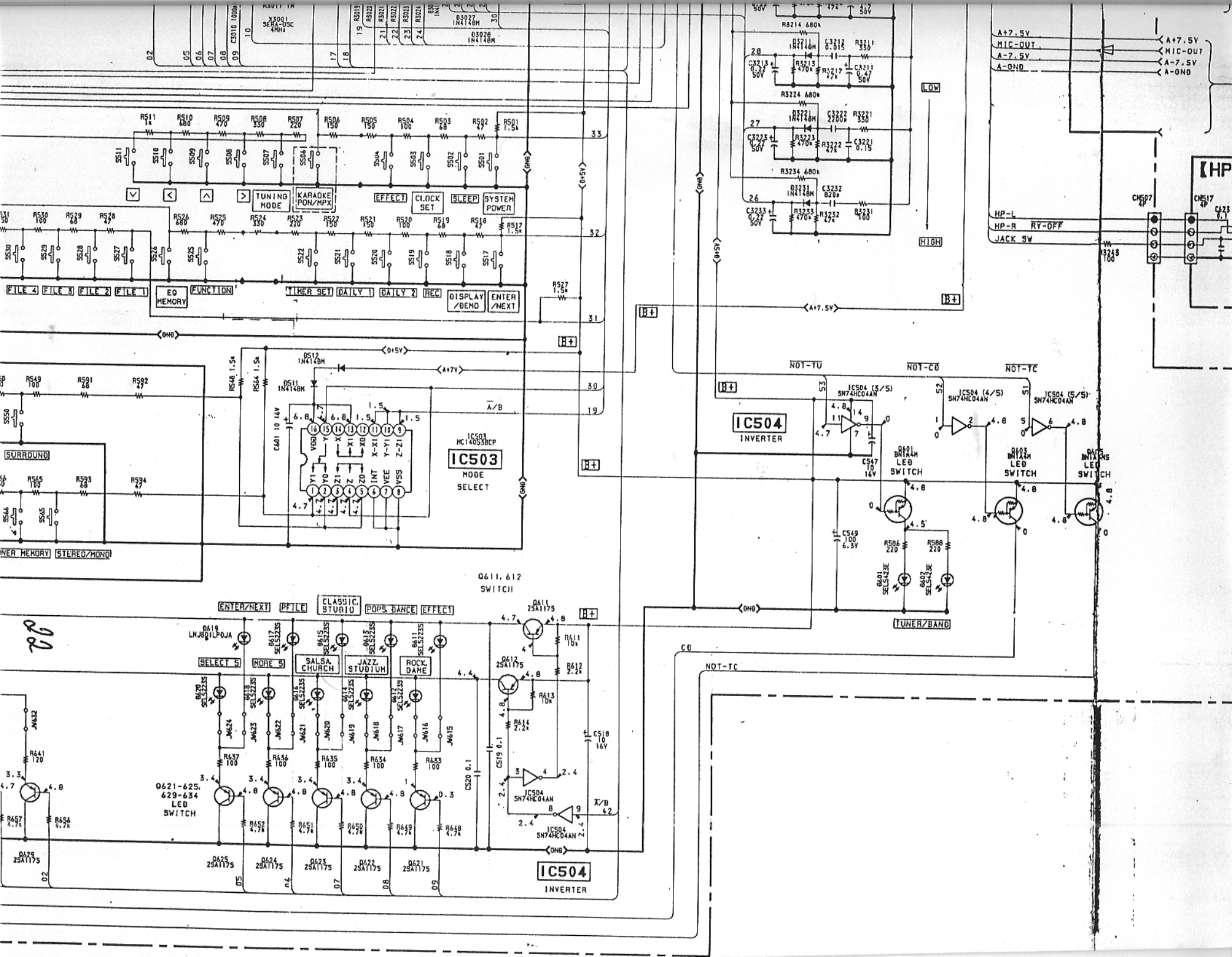
TUNING MODE
KARAOKE PON/MPX
EFFECT
CLOCK SET
SLEEP
SYSTEM POWER
FILE 4
FILE 3
FILE 2
FILE 1
EQ MEMORY
FUNCTION
TIMER SET
DAILY 1
DAILY 2
REC
DISPLAY /DEMO
ENTER /NEXT
SURROUND
TUNER MEMORY
STEREO/MONO
IC503
MC14053BCP
MODE SELECT
IC504
INVERTER
IC504 (3/5) SN74HC04AN
IC504 (4/5) SN74HC04AN
IC504 (5/5) SN74HC04AN
LED SWITCH
TUNER/BAND
Q611, 612 SWITCH
ENTER/NEXT
FILE
CLASSIC STUDIO
POPS DANCE
EFFECT
SELECT 5
MORE 5
SALSA CHURCH
JAZZ STUDIUM
ROCK GAME
Q621-625, 629-634 LED SWITCH
A+7.5V
MIC-OUT
A-7.5V
A-GND
HP-L
HP-R
RY-OFF
JACK SW
LOW
HIGH
NOT-TU
NOT-CD
NOT-TC
CD
B+
GND
D+5V
A+7V

5-21. DIAGRAMA ESQUEMÁTICO - SEÇÃO PAINEL DE CD -

• See page 19 for IC Pin Function. (IC501)

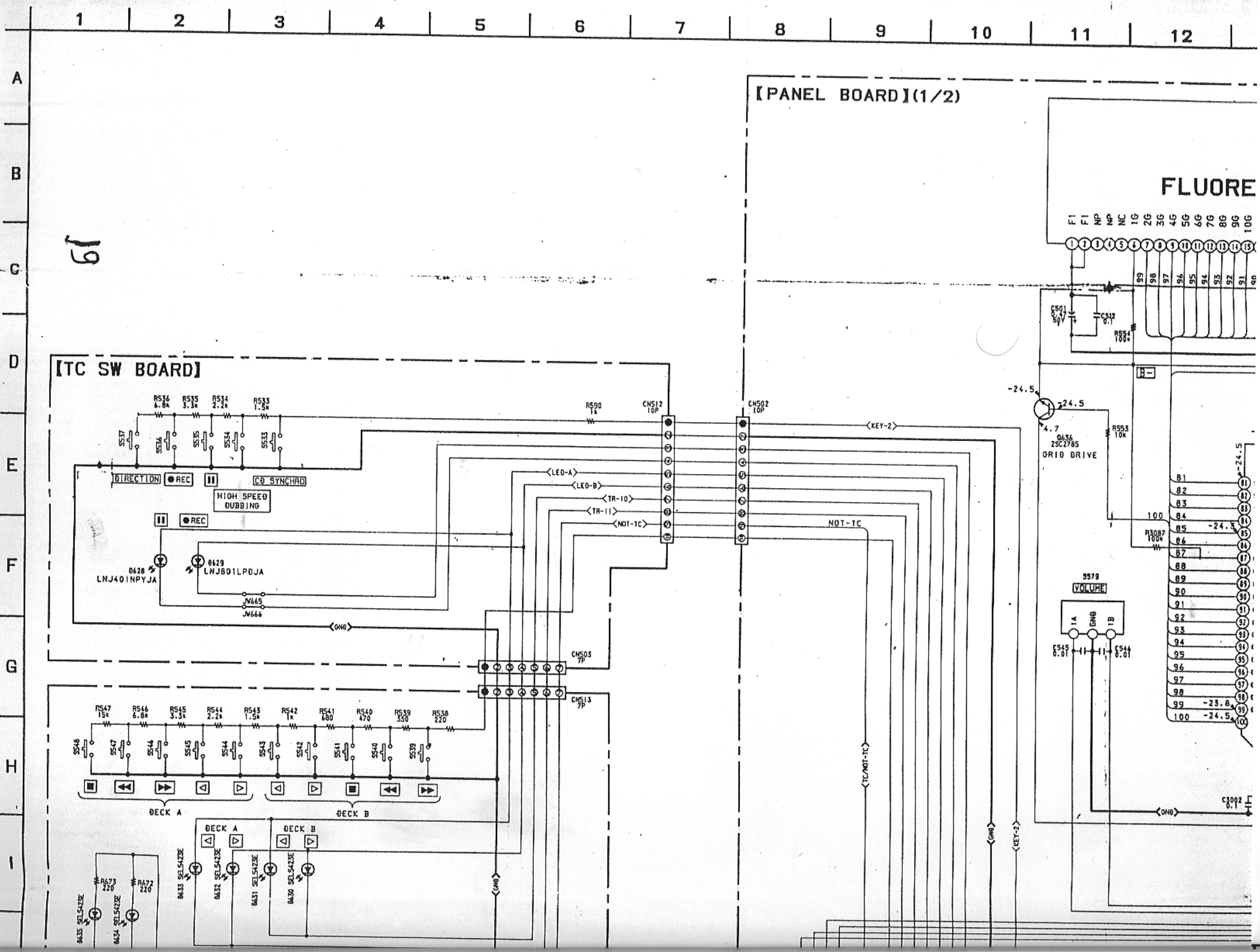

【TC CONTROL BOARD】

• IC Block Diagram

IC806 M65843FP

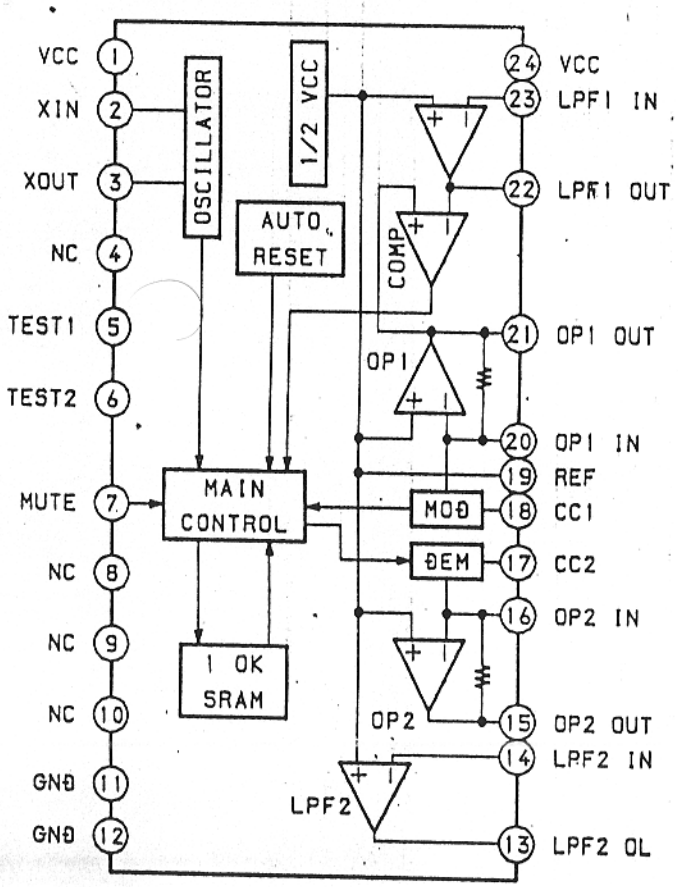

08

CD (R) BOARD CN514 (Page 67) G

CD (L) BOARD CN515 (Page 67) H

FILE 5 FILE SELECT FILE 4 FILE 3

TUNER/BAND DBFB SURROUND

TUNING TUNER MEMORY STEREO/MONO

5-16. SCHEMATIC DIAGRAM — DECK SECTION — • See page 54 for Printed wiring Board. (MAIN BOARD)

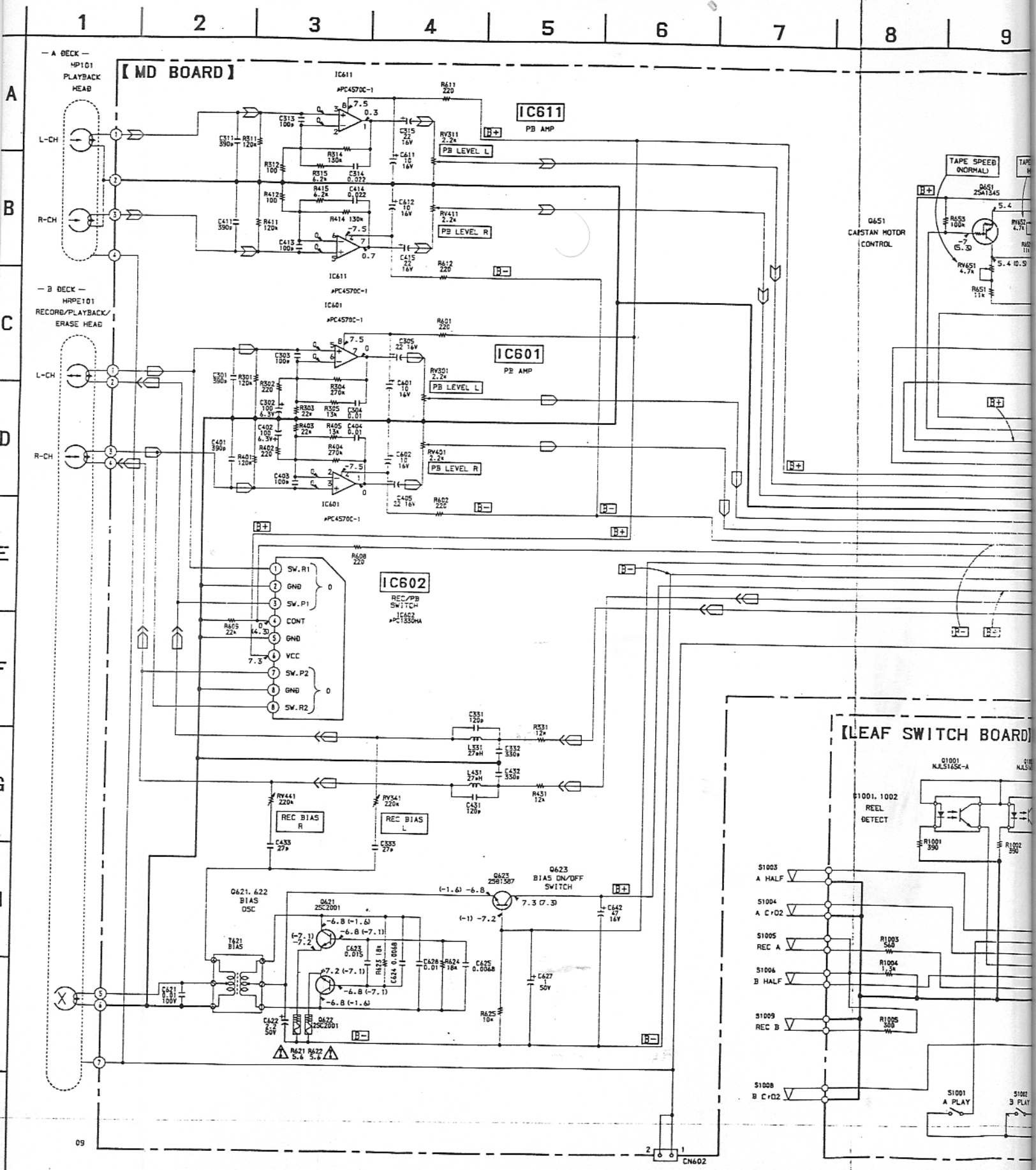

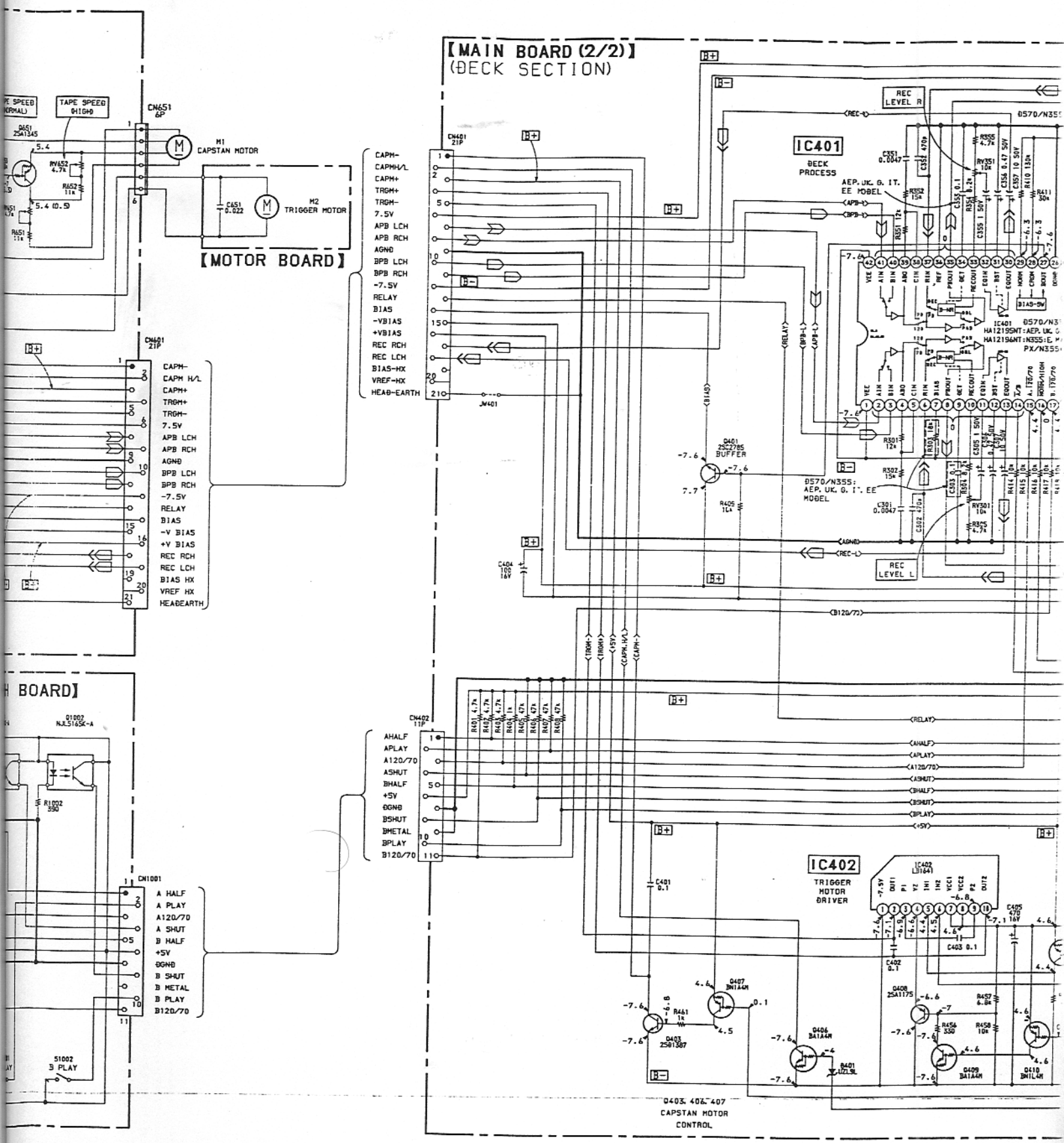
【MAIN BOARD (2/2)】
(DECK SECTION)
【MOTOR BOARD】
IC401
DECK PROCESS
IC402
TRIGGER MOTOR DRIVER
CN651 6P
CN401 21P
CN402 11P
CN1001
M1 CAPSTAN MOTOR
M2 TRIGGER MOTOR
REC LEVEL R
REC LEVEL L
CAPM-
CAPM H/L
CAPM+
TRGM+
TRGM-
7.5V
APB LCH
APB RCH
AGND
BPB LCH
BPB RCH
-7.5V
RELAY
BIAS
-VBIAS
+VBIAS
REC RCH
REC LCH
BIAS-HX
VREF-HX
HEAD-EARTH
AHALF
APLAY
A120/70
ASHUT
BHALF
+5V
DGND
BSHUT
BMETAL
BPLAY
B120/70
A HALF
A PLAY
A120/70
A SHUT
B HALF
+5V
DGND
B SHUT
B METAL
B PLAY
B120/70
Q403, 406, 407
CAPSTAN MOTOR
CONTROL

14

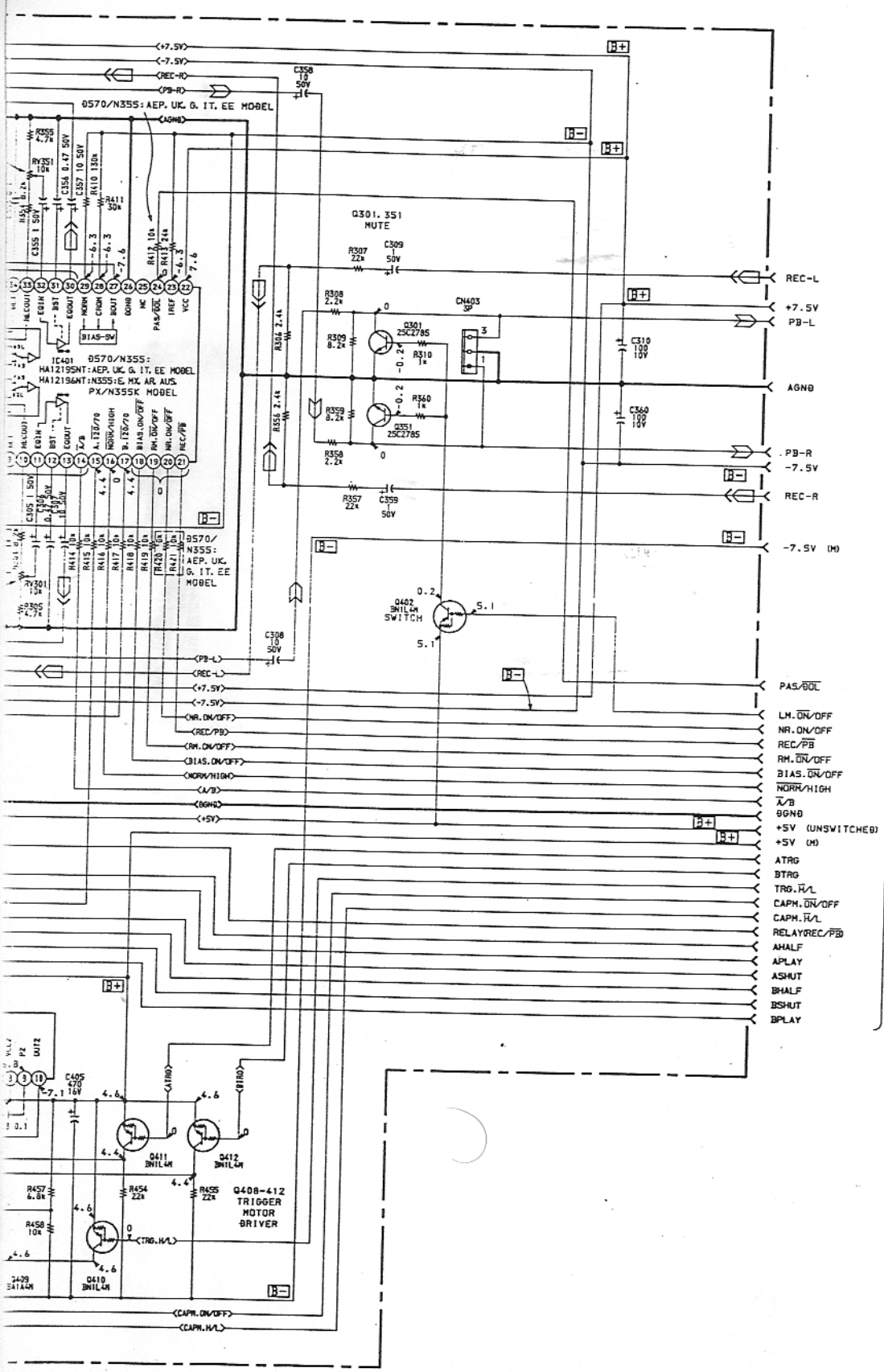

NOTE

- All capacitors are in μF unless otherw 50WV or less are not indicated except and tantalums.
- All resistors are in Ω and 1/4W or les specified.
- ⚠ :fusible resistor.

Note: The components identified by mark ⚠ line with mark ⚠ are critical fo Replace only with part number spec

- B+ :B+ Line.
- B− :B− Line.
- ▭ :adjustment for repair.
- Voltages and waveforms are dc with resp under no-signal conditions.
  no mark: PLAY
  ( ): REC
- Voltages are taken with a VOM (Input imp Voltage variations may be noted due to tion tolerances.
- Abbreviation
  G :German model.
  IT :Italian model.
  EE :East European model.
  MX :Mexican model.
  AUS: Australian model.
  AR :Argentine model.
- Signal path.
  ⩾ :PB (DECK A)
  ▷ :PB (DECK B)
  ▷» :REC (DECK B)

IC401 HA12195T

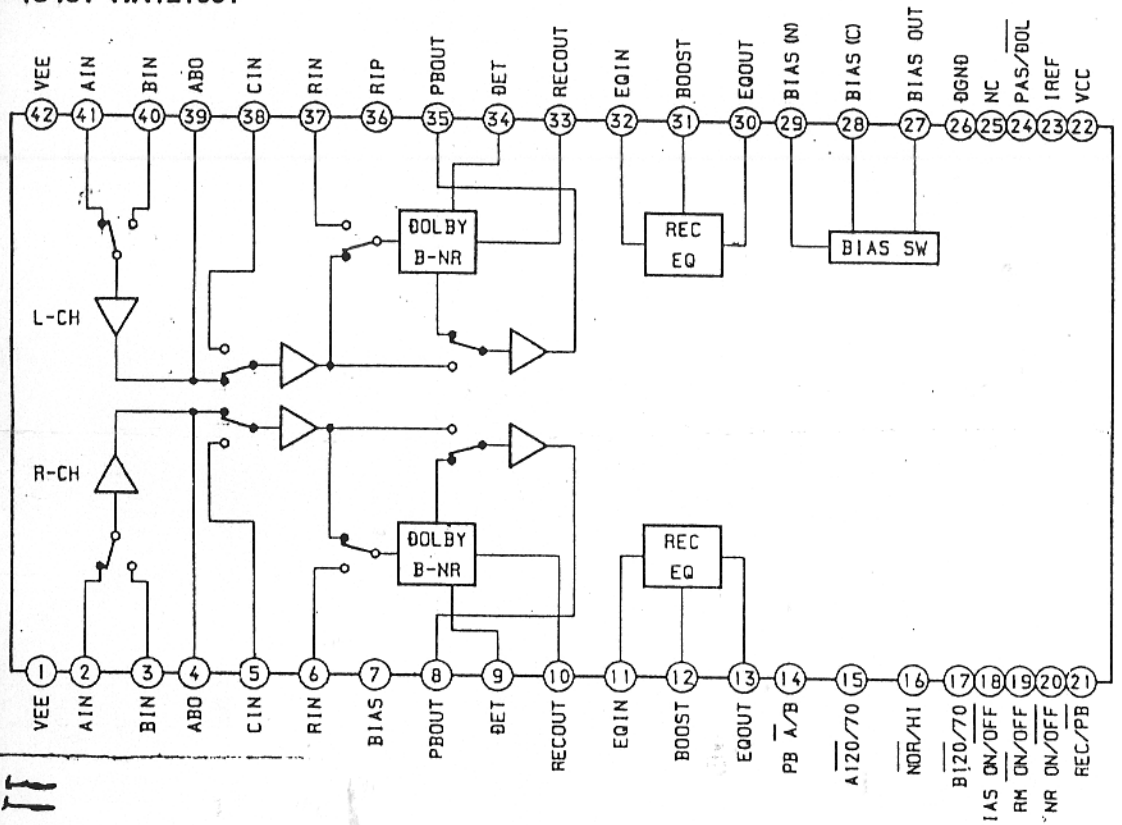

IC401 HA12196T

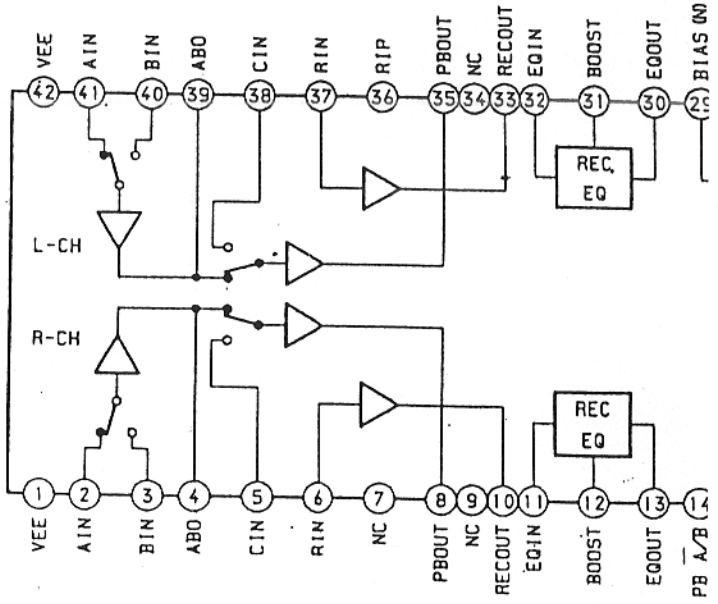

5-16. DIAGRAMA ESQUEMÁTICO - SEÇÃO DECK -See page 54 for Printed wiring Board. (MAIN BOARD)

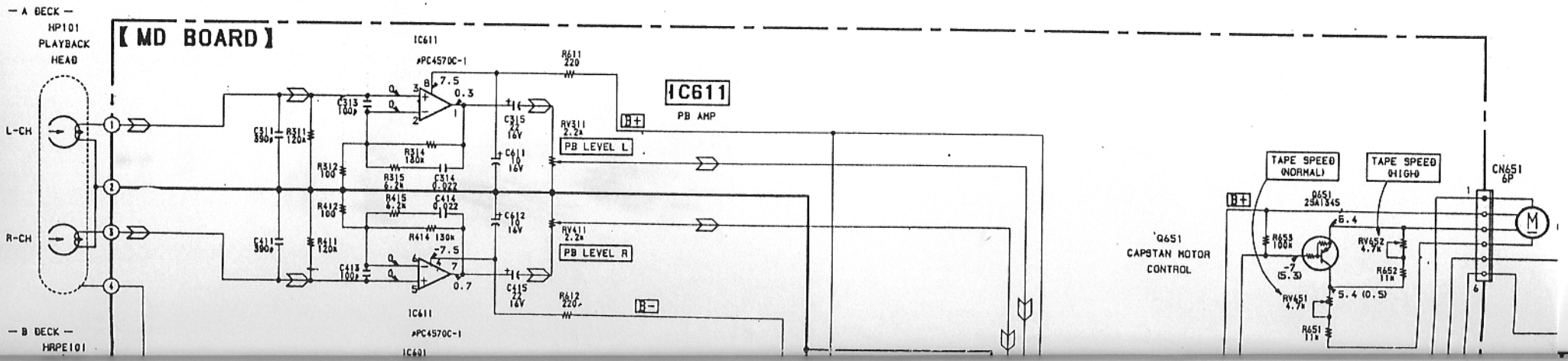

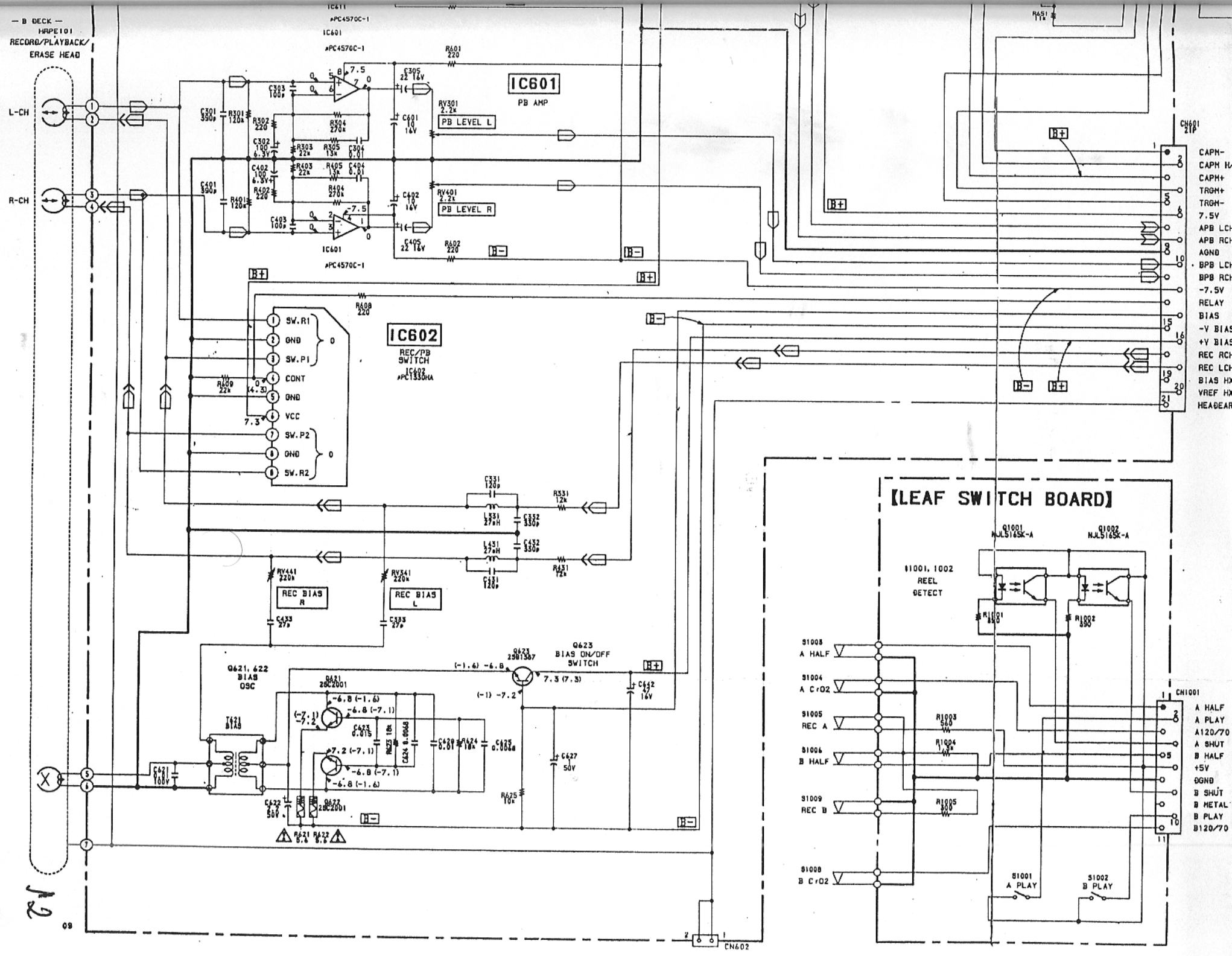

— B DECK —
HRPE101
RECORD/PLAYBACK/
ERASE HEAD
L-CH
R-CH
IC601
PB AMP
PB LEVEL L
PB LEVEL R
IC602
REC/PB
SWITCH
SW.R1
GND
SW.P1
CONT
GND
VCC
SW.P2
GND
SW.R2
REC BIAS
R
REC BIAS
L
Q621, 622
BIAS
OSC
Q623
BIAS ON/OFF
SWITCH
T621
BIAS
CN601
21P
CAPM-
CAPM+
TRGM+
TRGM-
7.5V
APB LCH
APB RCH
AGND
BPB LCH
BPB RCH
-7.5V
RELAY
BIAS
-V BIAS
+V BIAS
REC RCH
REC LCH
BIAS HX
VREF HX
HEADEAR
【LEAF SWITCH BOARD】
Q1001
NJL5165K-A
Q1002
NJL5165K-A
S1001, 1002
REEL
DETECT
S1003
A HALF
S1004
A CrO2
S1005
REC A
S1006
B HALF
S1009
REC B
S1008
B CrO2
CN1001
A HALF
A PLAY
A120/70
A SHUT
B HALF
+5V
DGND
B SHUT
B METAL
B PLAY
B120/70
S1001
A PLAY
S1002
B PLAY
CN602

12

5-8. DIAGRAMA ESQUEMÁTICO - SEÇÃO SINTONIZADOR -

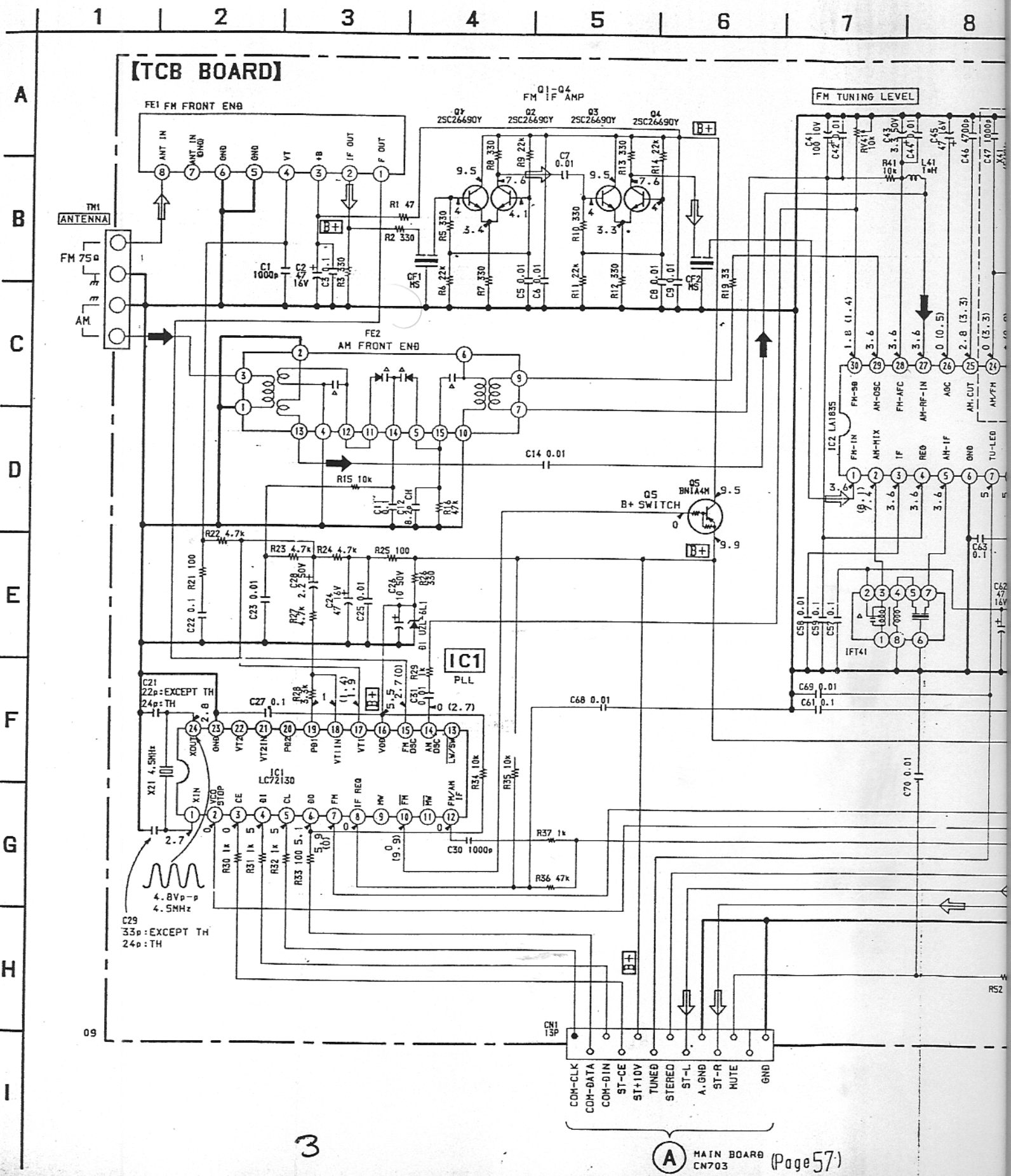

3

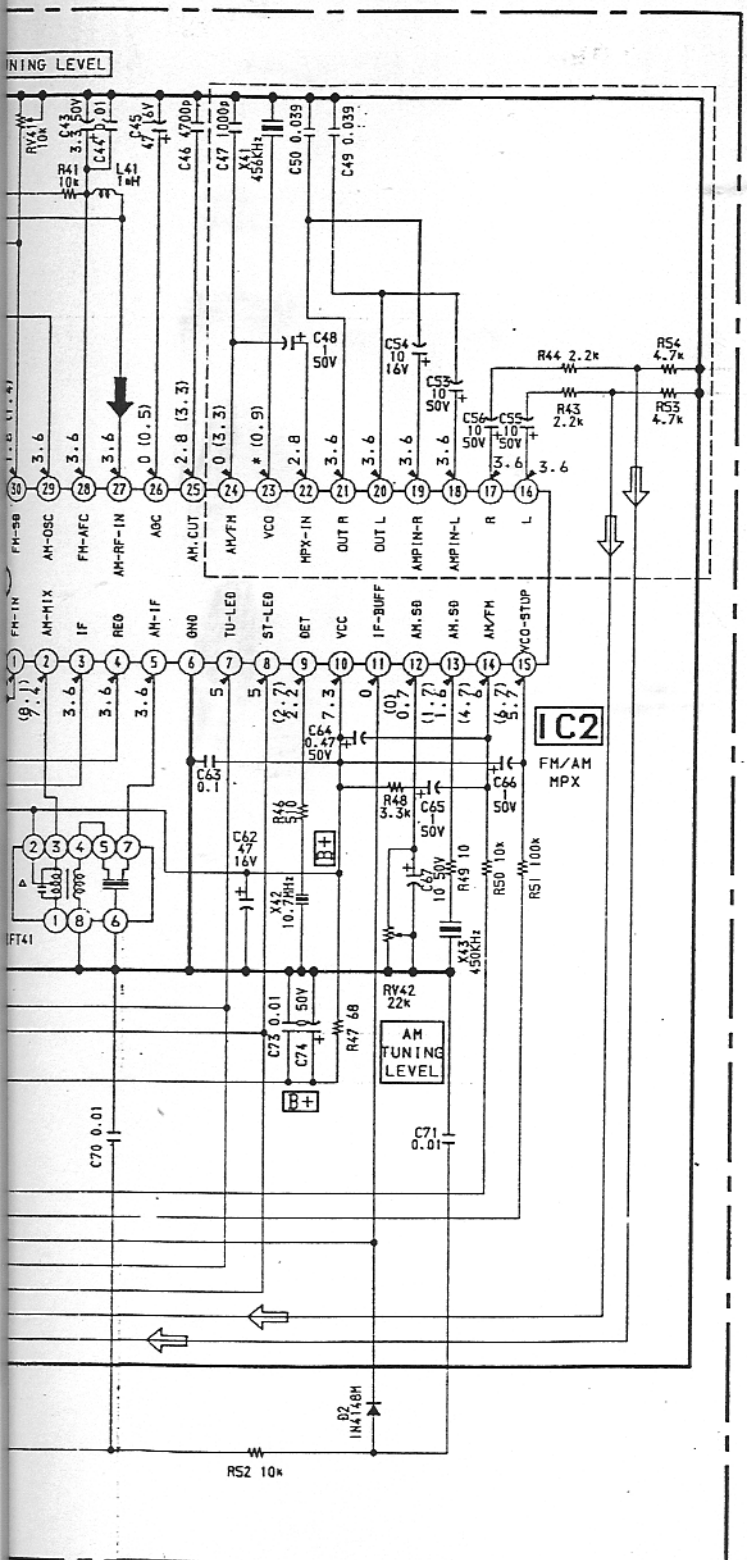

• Semiconductor Location

Ref. No.	Location
D1	F-2
D2	E-3
IC1	F-3
IC2	C-3
Q1	E-2
Q2	E-3
Q3	D-2
Q4	D-2
Q5	D-3

NOTE

- All capacitors are in μF unless otherwise noted. pF: μμF 50WV or less are not indicated except for electrolytics and tantalums.
- All resistors are in Ω and 1/4W or less unless otherwise specified.
- △ :internal component.
- ▭ :panel designation.
- B+ :B+ Line.
- ▭ :adjustment for repair.
- Voltages and waveforms are dc with respect to ground under no-signal (detuned) conditions.
  no mark: FM
  ( ): AM
  * :can not be measured.
- Voltages are taken with a VOM (Input impedance 10MΩ)
  Voltage variations may be noted due to normal production tolerances.
- Waveforms are taken with a oscilloscope
  Voltage variations may be noted due to normal production tolerances.

• Signal path.
⇨ :FM
➡ :AM

Note:
- o—— : parts extracted from the component side.
- △ : internal component.
- ▨ : Pattern from the side which enable seeing.

5-5. DIAGRAMA ESQUEMÁTICO - SEÇÃO CD -

• See page 79 for IC Block Diagrams. (IC101 — 104)

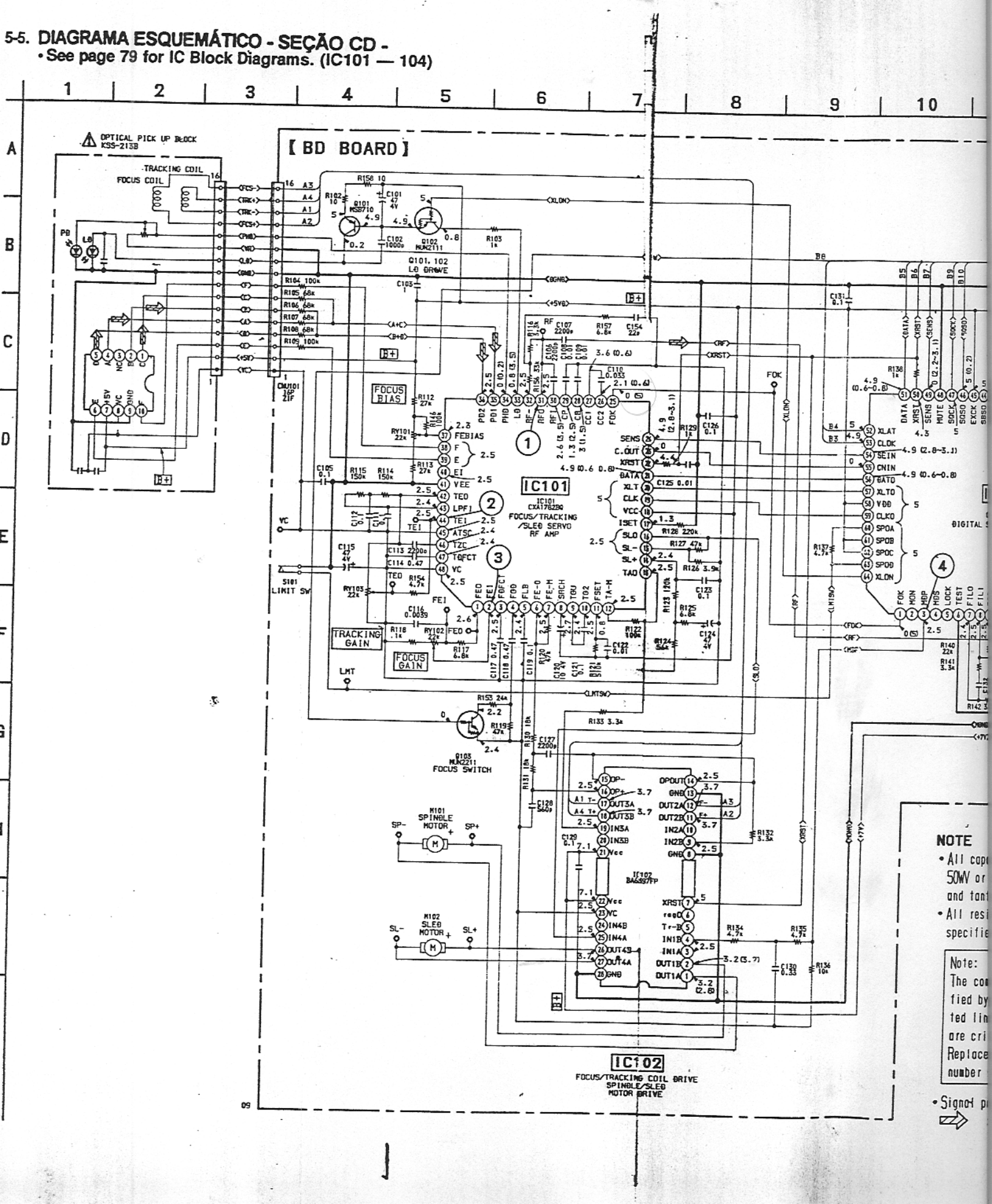

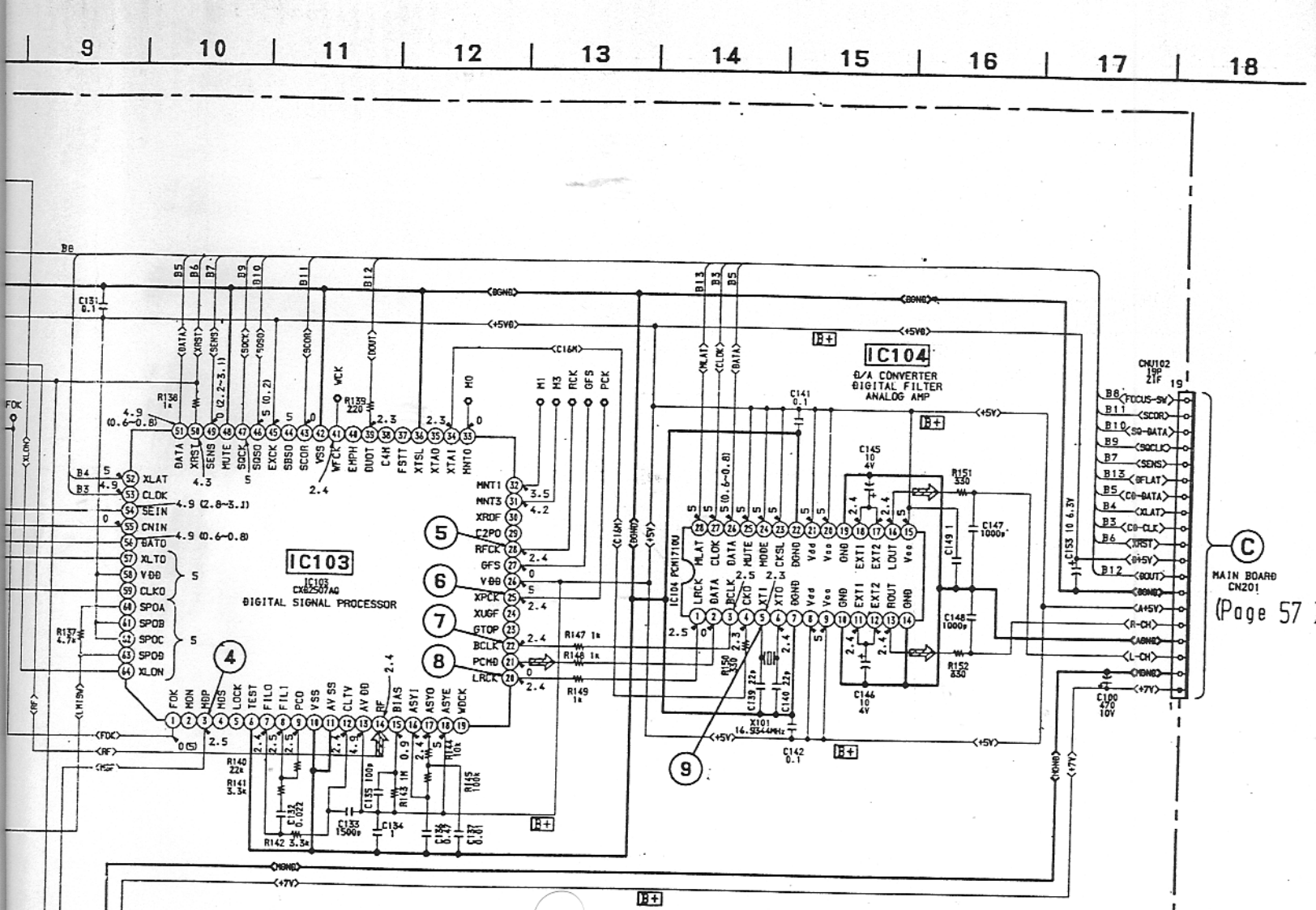

NOTE

- All capacitors are in μF unless otherwise noted. pF: μμF
  50WV or less are not indicated except for electrolytics and tantalums.
- All resistors are in Ω and 1/4W or less unless otherwise specified.

Note:	Note:
The components identified by mark ⚠ or dotted line with mark ⚠ are critical for safety. Replace only with part number specified.	Les composants identifiés par une marque ⚠ sont critiques pour la sécurité. Ne les remplacer que par une pièce portant le numéro spécifié.

- Signal path.
  ⇨ : CD
- B+ : B+ Line.
- ▭ : adjustment for repair.
- Voltages and waveforms are dc with respect to ground under no-signal conditions.
  no mark: STOP
  ( ): PLAY
- Voltages are taken with a VOM (Input impedance 10MΩ)
  Voltage variations may be noted due to normal production tolerances.
- Waveforms are taken with a oscilloscope.
  Voltage variations may be noted due to normal production tolerances.
- Circled numbers refer to waveforms.

2